TECHNIMOUNT
EMS®

BRACKET PRO SERIE® 60 – FL

USER MANUAL



AIRPLANES/ROTOCRAFTS FAA 14 CFR TECHNIMOUNT ENGINEERING

SAFETY AND FLEXIBILITY
WHERE IT MATTERS MOST

Copyrights

Copyright 2026 Technimount E.M.S. Holding Inc. is an affiliated company of Technologies CGC Inc. All Rights Reserved. No part of this publication may be reproduced, transmitted, transcribed, backed-up on a retrieval system, translated in any language, modified in any form or by any means, without the written permission of Technimount or its affiliate companies.

Trademarks

Product and medical device manufacturer names are Trademarks™ or Registered Trademarks® of their respective holders.

- Technimount EMS® et Bracket Pro Serie® are registered trademarks of Technologies CGC Inc.
- Hamilton-T1® is a registered trademark of Hamilton Medical.
- Oxivir® is a registered trademark of Diversey.
- Lavo® is a registered trademark of KIK Holdco Company, Inc.

For any issues with your Technimount product, its components, or for any technical questions during the installation, operation, or maintenance, please contact Technical Support at techsupport@technimount.com.

Contact Information

Technimount E.M.S. Holding Inc.

C/O: Regulatory Affairs

3770 Jean Marchand Street, Suite 100-C

Quebec (Quebec) G2C 1Y6

Canada

customerservice@technimount.com

techsupport@technimount.com

legal@technimount.com

www.technimount.com

T + 1 581 700-6613

SF + 1 888 639-2758 (North America)

Table of Contents

Copyrights ..... **ii**
Trademarks ..... **ii**
Contact Information ..... **ii**
1. General Mentions and Considerations **5**
1.1. Intended Use 5
1.2. User Competency 5
1.3. Warranties 6
1.3.1. Warranty Policy 6
1.3.2. Limited Warranty 6
1.3.3. International Warranty Clause 6
1.3.4. User Liability 7
1.4. Claims 7
1.4.1. Damaged or Defective Merchandise 7
1.4.2. Return Policy 7
1.4.3. Return Material Authorization (RMA) 8
1.4.4. Claim Process 8
2. General Safety Guidelines **9**
2.1. Symbols and Definitions 9
2.2. Labels 10
2.2.1. Manufacturing Label 10
2.2.2. Operation markings 11
2.3. Safety Measures 12
3. Technical Specifications **14**
4. Orientation Illustrations **15**
5. Illustrated Parts **17**
6. Illustrated Dimensions **20**
7. Safety Mechanism **22**
8. Operate the BP60–FL **23**
8.1. Install the Hamilton-T1 Transport Ventilator in the BP60–FL 23
8.2. Remove the Hamilton-T1 Transport Ventilator from the BP60–FL 24
8.3. Install the Hamilton-T1 Transport Ventilator in the Mounting System 25
8.4. Remove the Hamilton-T1 Transport Ventilator from the Mounting System 26

© 2026 Technimount E.M.S. Holding Inc.

Annex I Skills Assessment of the EMS and Clinical Personnel 28
Annex II Unpack the BP60–FL 30
Annex III Maintenance 31
..... Maintenance Frequency 32
..... Customer-Provided Tools 32
..... Tested and Approved Cleaning Solutions 32
..... Maintenance Plan 33
..... Safety Checks 33
..... Condition-Based Maintenance 34
..... Maintenance Log 35
..... Illustrated Inspection Points 36
Annex IV Replacement Parts/Kits 39

© 2026 Technimount E.M.S. Holding Inc.

1. General Mentions and Considerations

This user manual includes detailed product information, standards and guidelines to assist the administrator/ manager/supervisor and biomedical technician (or equivalent) with the unpacking, assembling (when indicated), maintenance, training and skills assessment of the EMS and clinical personnel, as well as specific user-related information to safely and effectively operate the Bracket Pro Serie 60 – FL (hereinafter called BP60–FL).

Please read the user manual thoroughly to fully assess, comprehend, then relay its content to EMS and clinical personnel during training, to warn them of any potential danger of its abuse, how to safely use the product and provide a safe environment for patients as well as themselves. Your established internal protocols should be updated to include the Technimount product(s) standards, guidelines, requirements and safety recommendations included within this documentation. The user manual should remain available to users when needed and relayed if the product is subsequently sold.

NOTE : Technimount continually seeks advancements in product design and quality. While the user manual contains the most updated product information available at the time of printing, it may contain minor differences from the current version, including image references. For more information, please contact Technical Support at techsupport@technimount.com.

NOTE : Technimount reserves the right to change part numbers and products without notice. Please contact Customer Service at customerservice@technimount.com to ensure product options and availability.

1.1. Intended Use

The BP60–FL is a mounting bracket designed to aid trained EMS and clinical personnel secure and transport the Hamilton-T1 Transport Ventilator during air emergency medical services and critical care transport.

1.2. User Competency

To safely operate the BP60–FL, personnel must have the required skill level to comply with their function and level of interaction with the mounting bracket. Training should be given to EMS and clinical personnel prior to them using the BP60–FL. Refer to the « Skills Assessment of the EMS and Clinical Personnel » section on page 28 to evaluate their competency.



Indicates who the content is intended for and the level of competency required. The definitions of the three (3) levels of competency are specified below.

- **Competent (trained EMS and clinical personnel):** Has received the required training, is sufficiently knowledgeable to safely operate the product and has passed the skills assessment (refer to the « Skills Assessment of the EMS and Clinical Personnel » section on page 28).

  NOTE : Any member of the EMS and clinical personnel who has not received the required training and lacks the knowledge needed to safely operate the mounting bracket must not use the product.

- **Proficient (administrator/manager/supervisor):** Has in-depth knowledge and product comprehension, and is familiar with standards and guidelines. Skilled to train the EMS and clinical personnel on how to safely

© 2026 Technimount E.M.S. Holding Inc.

use the product.

- **Advanced (biomedical technician or equivalent):** Has extensive mechanical experience. Skilled to perform the unpacking, assembly, safety checks and condition-based maintenance procedures as detailed herein, or the basic troubleshooting, upgrade and/or replacement procedures if applicable.

1.3. Warranties

1.3.1. Warranty Policy

This statement constitutes Technimount's entire warranty policy with regards to Technimount products. Technimount makes no other warranty or representation, neither expressed nor implied, except as stated herein. There is no warranty of merchantability or warranty of fitness for any particular purpose. Under no circumstances will Technimount be held liable hereunder for incidental or consequential damages, arising from or in any manner, related to sales or use of any such product.

Technimount E.M.S. Holding Inc. guarantees to the original "Purchaser" of the "Product" with which this "Limited warranty" is included, that the product will be free from "Defects" in workmanship and materials under normal use for a "Warranty period" of one (1) year from the product purchase date by the purchaser. During the warranty period, the product will be repaired or replaced according to the "Limited warranty" without charge to the purchaser for parts or labor. The parts and product may be repaired or replaced with new or refurbished parts or products. Herein this Limited Warranty, "Refurbished" means parts and products which have been returned to the factory, specifically. If the product is repaired or replaced within the warranty period, the greater of the remaining warranty period will apply, or three (3) months from the date of repair or replacement. If the product is repaired or replaced after the warranty period has expired, the warranty period for the repair or replacement will expire three (3) months after the repair or replacement date.

1.3.2. Limited Warranty

Technimount products are intended to secure in place medical devices only in the case of a single emergency landing, and must thereafter be immediately replaced. If the end user uses a Technimount product following an emergency landing, it is at the end user's own risk, and Technimount will not be held liable.

The limited warranty does not apply to normal wear that could result from normal use. It does not apply when the product or any of its components have been disassembled or repaired by someone not authorized by "Technimount". It does not cover repair or the replacement of any product or part thereof damaged by neglect, misuse, moisture, liquids, exposure to heat, accidents, abuse, and non-compliance with the instructions for installation and use provided with the product. It does not cover physical damage to the surface of the product. The decision to repair, replace or refuse the coverage is final and at the sole discretion of Technimount, without any compensation or obligation from Technimount. The product, defined as a "mounting bracket" or "bracket", is specifically designed to secure and transport the Hamilton-T1 Transport Ventilator during air emergency medical services and critical care transport, and should only be used to fulfill this requirement. Any other use will void the warranty and Technimount shall not be held liable on any claim if the product has been modified or adapted for use.

1.3.3. International Warranty Clause

This warranty abides by the Canadian domestic policy. Warranty outside Canada may vary by country. Please contact Customer Service at customerservice@technimount.com for more information.

© 2026 Technimount E.M.S. Holding Inc.

1.3.4. User Liability

The purchaser and administrator are responsible to validate regulations and standards for safety in their region, to comply with applicable safety regulations. Technimount is not responsible to inform the purchaser or the administrator of any applicable legislation for safety in their area.

The administrator is responsible for providing proper training to any personnel who will install, operate and perform maintenance on Technimount products.

1.4. Claims

1.4.1. Damaged or Defective Merchandise

ICC Regulations require that claims for damaged merchandise must be made with the carrier within fifteen (15) days of the reception date. **Do not accept** damaged merchandise unless such damage is noted on the delivery receipt at the time of reception. Upon prompt notification, Technimount will file a freight claim with the appropriate carrier for damages incurred. Claims are limited in amount to the actual replacement cost. If the claim has not been received by Technimount within the fifteen (15) day period following the date of delivery, or the damage was not noted on the delivery receipt at the time of receipt, the customer will be responsible for the full payment of the original invoice.

Claims for any short or broken merchandise must be made within thirty (30) days of invoicing. For details, refer to the « Claim Process » section on page 8 or contact Customer Service at customerservice@technimount.com.

1.4.2. Return Policy

Technimount products may be returned up to sixty (60) days from the reception date, if:

- The received product does not match what was originally ordered.
- The product does not meet the Technimount technical sheet specifications.
- The product is not compatible with the system on which it was intended to be installed on.

To return a Technimount product,

- A Return Material Authorization (RMA) must be requested and approved by Technimount prior to returning the product.
- Products must be returned undamaged and in its original packaging, appropriately identified with the approved RMA number. Returns will not be approved on a modified or damaged item.
- Charges may apply if the package received is damaged or items are missing.
- Purchaser is responsible for a restocking fee (refer to « Table 1: Restocking fees » on page 8).

© 2026 Technimount E.M.S. Holding Inc.

Table 1: Restocking fees

RESTOCKING FEES	
Prior to thirty (30) days	10%
Prior to forty-five (45) days	25%
Prior to sixty (60) days	30%

For any manufacturing defect, refer to the conditions within the warranty policy or contact Customer Service at customerservice@technimount.com for additional information.

1.4.3. Return Material Authorization (RMA)

The Technimount Customer Service department is responsible for all merchandise returns and will provide a Return Material Authorization (RMA) number, upon approval. The RMA must be printed and placed on the returned merchandise. Technimount reserves the right to charge shipping and restocking fees (refer to « Table 1: Restocking fees ») for the returned items. Special, modified, or discontinued items are not subject to returns.

1.4.4. Claim Process

Upon reception of the returned merchandise, a thorough inspection will be performed. If the merchandise is compliant with the return policy or it is found that the product is defective, Technimount will take corrective actions and close the claim. If, however, it is found that the product is not defective, but rather misused or abused, the product will not be covered by the warranty. Details of our findings and conclusions will be provided shortly thereafter. To submit a claim, contact Customer Service at customerservice@technimount.com to obtain a Return Material Authorization (RMA) form and return instructions.

© 2026 Technimount E.M.S. Holding Inc.

2. General Safety Guidelines



The content in this section is intended for personnel who have a competent, proficient or advanced level of competency. Refer to the « User Competency » section on page 5 if needed.

Pictograms, safety symbols and labels are used to alert the user to a potentially hazardous situation, which, if not avoided, may endanger the patients or the EMS and clinical personnel or clinical personnel, and/or damage the product. This includes the special care necessary for the safe and effective use of the Technimount product to avoid damage that may occur from use or misuse.

The terms "Warning" and "Caution" herein carry special meaning and should be carefully reviewed before reading the « Safety Measures » section on page 12.

WARNING – Indicates a hazardous situation that, if not avoided, could result in death or serious injury, and/or damage the product.

CAUTION – Indicates a hazardous situation that, if not avoided, could result in minor or moderate injury, and/or damage the product.

2.1. Symbols and Definitions



WARNING – Risk of Injury

Indicates when a misuse of the Technimount product could result in injuries to the patients or EMS and clinical personnel, and/or damage to the product.



CAUTION – Safe Practice

Alerts the reader to pay special attention to the recommendations and methods outlining how to safely operate the product to minimize risks to the patients, EMS and clinical personnel, and/or to the product.



CAUTION – Safe Handling and Operation

Alerts the reader to pay special attention to the recommendations for safe use of the product, and of potentially hazardous situations that could result in minor injuries to the patients or EMS and clinical personnel. This includes the special care necessary for the safe and effective use of the product to avoid damage that may occur from use or misuse.



CAUTION – Safe Working Load (SWL)/Load Balance

Indicates the maximum charge for a safe use of the product.



CAUTION – Follow Instructions for Use

Call for action. Reminds the reader to consult the user manual for information.

© 2026 Technimount E.M.S. Holding Inc.

2.2. Labels

Labelling on the surface of the Technimount product, quickly identify potential risks and provides information to the user. A manufacturing label, including the serial number and the safe working load specifications (Figure 1), as well as operation markings (Figure 2), can be seen on the Technimount product.

NOTE : The illustrations herein are for user-comprehension purposes and may differ from your actual configuration. The labelling specifications below apply to any compatible mounting bracket. Refer to their user documentation for the safety guidelines and safe use, if needed.

2.2.1. Manufacturing Label

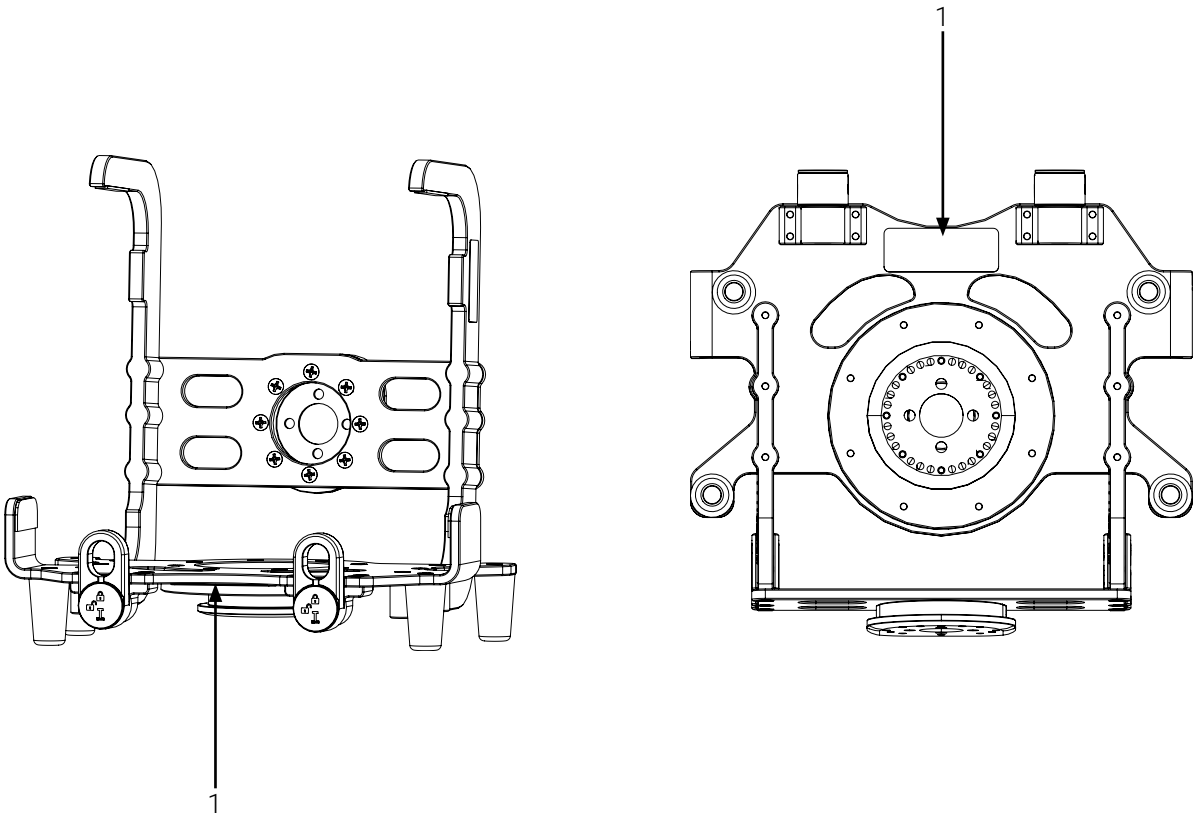

1. Manufacturing label

Figure 1: Location of the manufacturing label

2.2.2. Operation markings

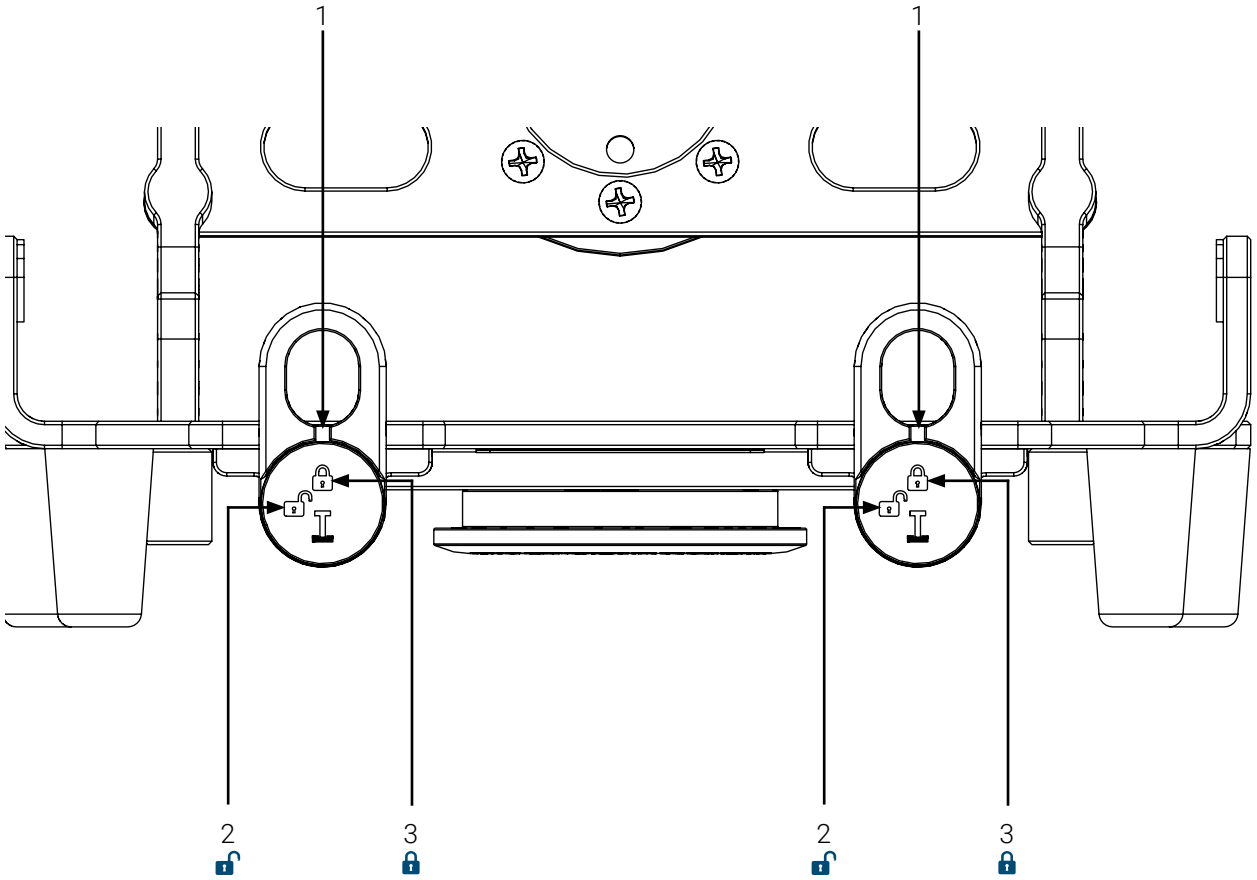

1. Position indicator (2X; 1 per rotary lock)
2. "Unlocked" position marking 🔓 (2X; 1 per rotary lock)
3. "Locked" position marking 🔒 (2X; 1 per rotary lock)

Figure 2: Location of the operation markings

© 2026 Technimount E.M.S. Holding Inc.

2.3. Safety Measures

Carefully read all the safety measures herein before operating the Technimount product, and always abide by all the safety guidelines identified within this document.

Specific safety measures relating to the safety checks and the conditioned-based maintenance, intended for personnel who have an advanced level of competency, can be found in the « Maintenance » section on page 31.

WARNING – Unauthorized Systems

- **Under no circumstances** should the BP60–FL be installed in, connected to, or used in combination with any third party/competitor mounting system, mounting bracket, medical device or similar equipment, unless Technimount has provided a formal written confirmation of compatibility for the specific configuration.
- The BP60–FL was specifically engineered to be used with the Hamilton-T1 Transport Ventilator. Using any other medical device may cause the equipment to fall, operate unpredictably, or fail, resulting in serious injury to the patients or to the EMS and clinical personnel.
- The BP60–FL was engineered and tested exclusively for use with specific authorized and compatible Technimount components and systems. Using any unauthorized and/or incompatible system may cause the equipment to fall, operate unpredictably, or fail, resulting in serious injury to the patients or to the EMS and clinical personnel.
- Technimount assumes no responsibility for any damage, malfunction, or injury arising from use of unauthorized or incompatible systems. Using any unauthorized and/or incompatible system may result in non-compliance with the applicable safety standards and will immediately void all warranties and liability coverage.
- Technimount products are intended for use only within their defined applications, including but not limited to, emergency medical services, critical care transport, and approved healthcare environments. Refer to the « Technical Specifications » section on page 14.
- Regulations and standards for safety are the sole responsibility of the end user. Ensure that your established internal protocols are updated and meet the technical specifications requirements herein (refer to the « Technical Specifications » section on page 14), as well as the local and regional compliance requirements before use.

WARNING – Risk of Injury

- **Do not use** the BP60–FL if there are any loose or missing screws, to avoid risks that may cause damage or the equipment to fall or operate unpredictably, resulting in serious injury to the patients or to the EMS and clinical personnel.
- Immediately stop using the BP60–FL if any serious incident occurs and inform authorized personnel, to contact the Technical Support at technicalsupport@technimount.com for a remedial action plan and report the incident to the applicable regulatory agency.

© 2026 Technimount E.M.S. Holding Inc.



CAUTION – Safe Handling and Operation

- Always wait until the transport vehicle is immobilized before installing/removing the medical device in/from the BP60–FL.
- Always ensure that the medical device is secured in the BP60–FL before installing/removing the BP60–FL in/from the mounting system, to avoid risks that may cause damage or the equipment to fall or operate unpredictably, resulting in serious injury to the patients or to the EMS and clinical personnel.
- Always pay close attention **not to wedge** the power cords/tubing during the installation/removal of the medical device in/from the BP60–FL and/or the BP60–FL in/from the mounting system.



CAUTION – Safe Practice

- Always pay close attention to the safety mechanisms of the BP60–FL, to avoid risks that may cause damage or the equipment to fall or operate unpredictably, resulting in serious injury to the patients or to the EMS and clinical personnel Follow the recommended maintenance plan and its guidelines, as described in this user manual.
- Always practice safely operating the BP60–FL until the manipulations have been perfected, before use with patients. Improper use of the mounting bracket may cause damage or the equipment to fall or operate unpredictably, resulting in serious injury to the patients or to the EMS and clinical personnel.



CAUTION – Safe Working Load (SWL)/Load Balance

- **Do not overload or exceed** the total Safe Working Load (SWL) of the BP60–FL, to avoid tipping incidents or risks of collapsing. Refer to the « Technical Specifications » section on page 14 for the SWL specifications.
- The Safe Working Load (SWL) of the BP60–FL **does not override** the maximum load capacity of another Technimount product or system, neither those of the medical devices, and/or medical equipment accessories. To comply with the SWL specification, the entire configuration should be taken into account. Refer to the user documentation of each product applicable to your specific configuration for specifications.



CAUTION – Follow the Instruction for Use

Always refer to your established internal protocols, as well as read and abide by the safety guidelines and instructions provided in the user documentation of the BP60–FL, the mounting system and the Hamilton-T1 Transport Ventilator.

© 2026 Technimount E.M.S. Holding Inc.

3. Technical Specifications

The content in this section is intended for personnel who have a competent, proficient or advanced level of competency. Refer to the « User Competency » section on page 5 if needed.

Product Name	Bracket Pro Serie 60 – FL
Description	Mounting bracket specifically designed to secure and transport the Hamilton-T1 Transport Ventilator during air emergency medical services and critical care transport
Product Code	- 700-20-HM–FL (standard bottom disc) - 700-21-HM2D–FL (standard bottom disc and anti-rotation micro disc) - 700-23-HM-FL-MCD (micro disc and anti-rotation micro disc)
Operating Environment	EMS/CCT (air)
Compliance	Tested in compliance with 14 CFR 23.561, 14 CFR 25.561, 14 CFR 27.561 and 14 CFR 29.561
Expected Service Life	5 years
Compatible Mounting Systems	- Standard Surface Base (compatible with standard bottom discs) - Micro Base (compatible with micro disc and anti-rotation micro discs) - Q-Protrak–FL (compatible with micro disc and anti-rotation micro discs)
Compatible Medical Devices	Hamilton-T1 Transport Ventilator
Dimensions (W X D X H)	- 700-20-HM–FL – 292.1 mm (11.5 in.) W X 254 mm (10 in.) D X 300.6 mm (11.8 in.) H - 700-21-HM2D–FL – 292.1 mm (11.5 in.) W X 269.6 mm (10.6 in.) D X 300.6 mm (11.8 in.) H - 700-23-HM-FL-MCD – 292.1 mm (11.5 in.) W X 269.6 mm (10.6 in.) D X 300.6 mm (11.8 in.) H
Weight	- 700-20-HM–FL – 2.5 kg (5.6 lb) - 700-21-HM2D–FL – 2.7 kg (5.9 lb) - 700-23-HM-FL-MCD – 2.6 kg (5.7 lb)
Composition	Aluminum, stainless steel and plastic
Total Safe Working Load (SWL)	7.5 kg (16.5 lb)
Operating Temperature	- 35° C to 45° C (- 31° F to 113° F)
Tested and Approved Cleaning Solutions	- Oxivir, 5% Hydrogen Peroxide with Peracetic Acid (AHP) - Lavo 12, 10 000 ppm Sodium Hypochlorite - TNT-100, 5% Quaternary Ammonium Compound - Spectro-Sept, 5% Ethyl Alcohol - Spectrol, 5% EDTA salt
Options	N/A

© 2026 Technimount E.M.S. Holding Inc.

4. Orientation Illustrations

The content in this section is intended for personnel who have a competent, proficient or advanced level of competency. Refer to the « User Competency » section on page 5 if needed.

The orientations referenced herein are from the EMS and clinical personnel standpoint, when facing the BP60–FL (Figure 3, Figure 4 and Figure 5).

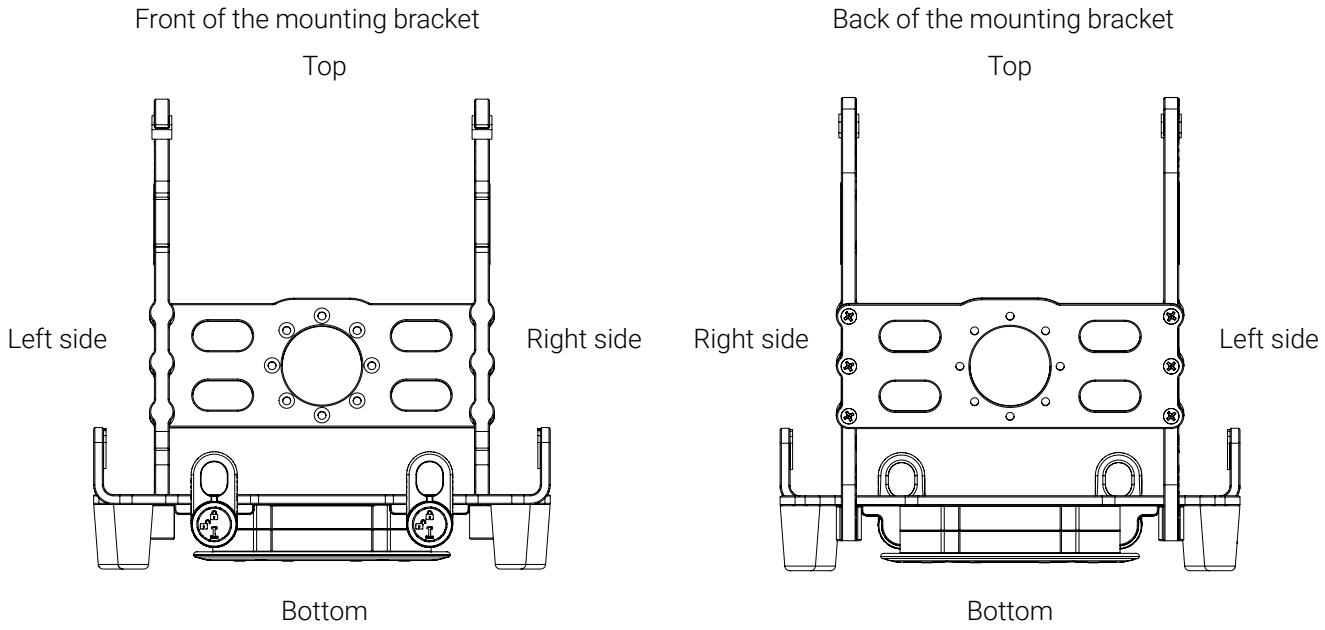

Figure 3: BP60–FL orientation illustration – standard bottom disc

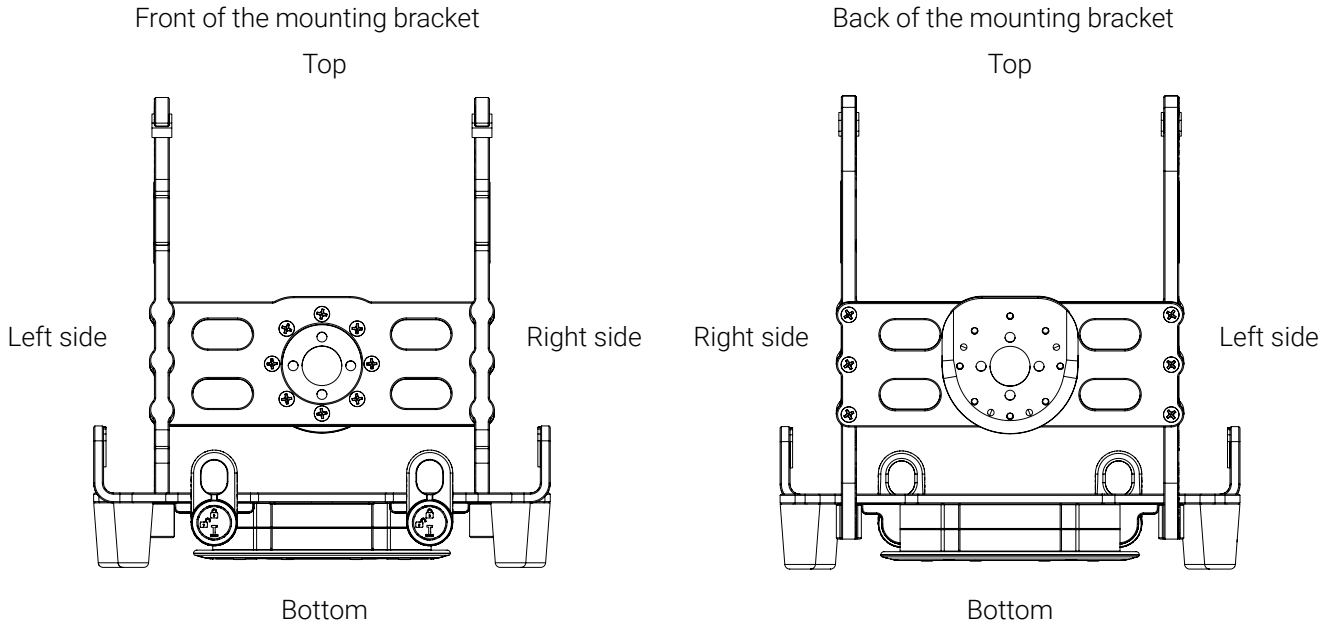

Figure 4: BP60–FL orientation illustration – standard bottom disc and anti-rotation micro disc

© 2026 Technimount E.M.S. Holding Inc.

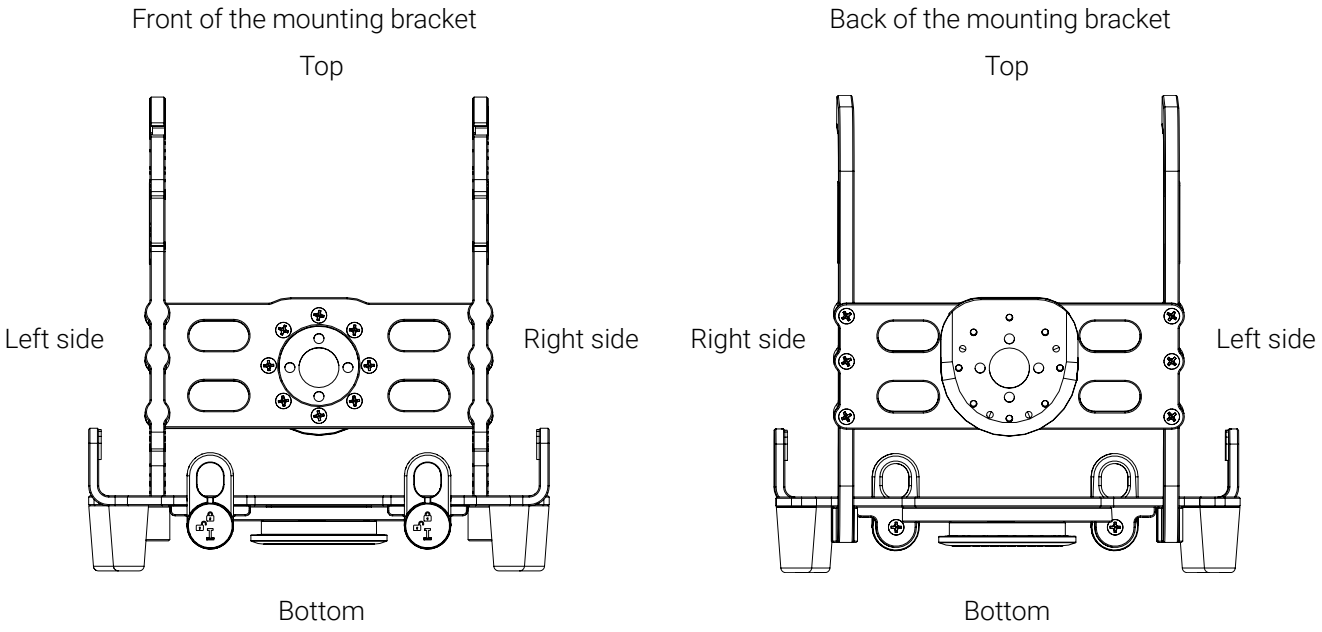

Figure 5: BP60–FL orientation illustration – micro disc and anti-rotation micro disc

© 2026 Technimount E.M.S. Holding Inc.

5. Illustrated Parts

The content in this section is intended for personnel who have a competent, proficient or advanced level of competency. Refer to the « User Competency » section on page 5 if needed.

Figure 6, Figure 7 and Figure 8 illustrate the components of the BP60–FL.

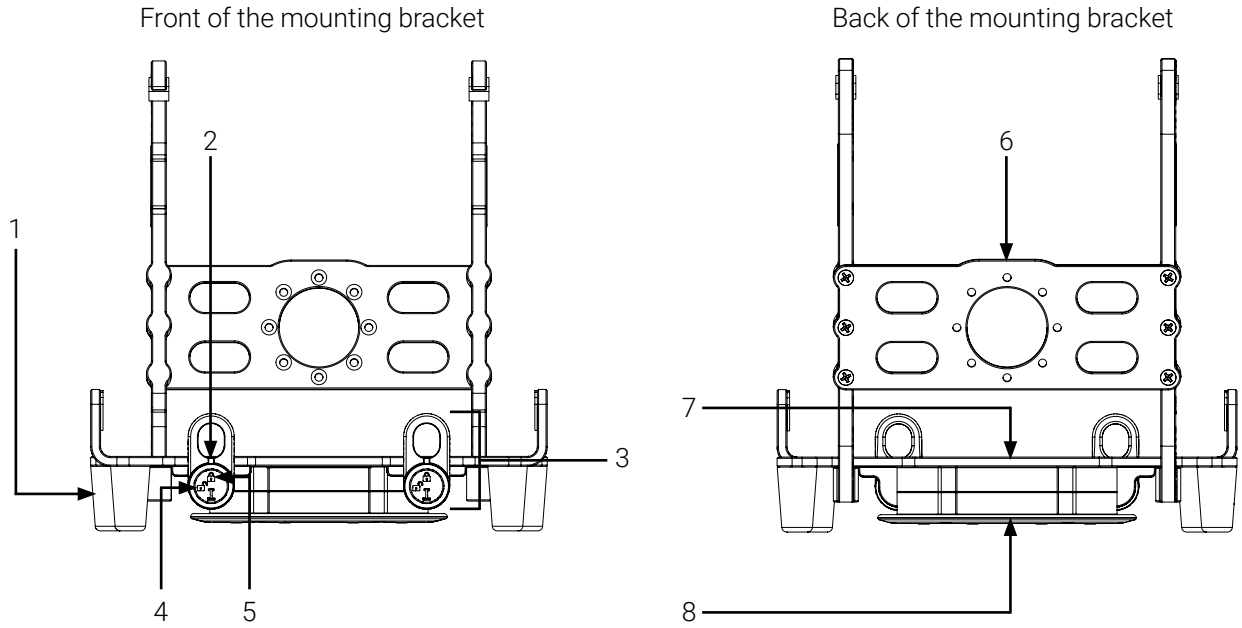

1. Foot (4X)
2. Position indicator (2X; 1 per rotary lock)
3. Rotary lock (2X)
4. «Unlocked» position marking (2X; 1 per rotary lock)
5. «Locked» position marking (2X; 1 per rotary lock)
6. Back plate
7. Bottom plate
8. Standard bottom disc

Figure 6: BP60–FL components – standard bottom disc

© 2026 Technimount E.M.S. Holding Inc.

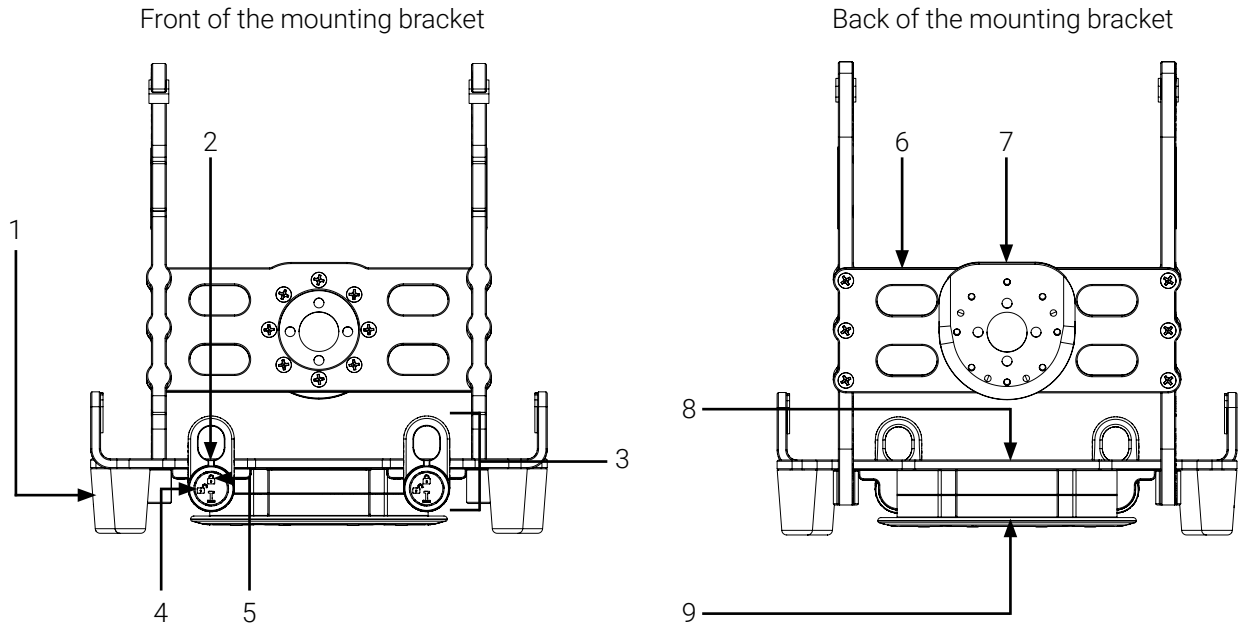

1. Foot (4X)
2. Position indicator (2X; 1 per rotary lock)
3. Rotary lock (2X)
4. «Unlocked» position marking (2X; 1 per rotary lock)
5. «Locked» position marking (2X; 1 per rotary lock)
6. Back plate
7. Anti-rotation micro disc
8. Bottom plate
9. Standard bottom disc

Figure 7: BP60–FL components – standard bottom disc and anti-rotation micro disc

© 2026 Technimount E.M.S. Holding Inc.

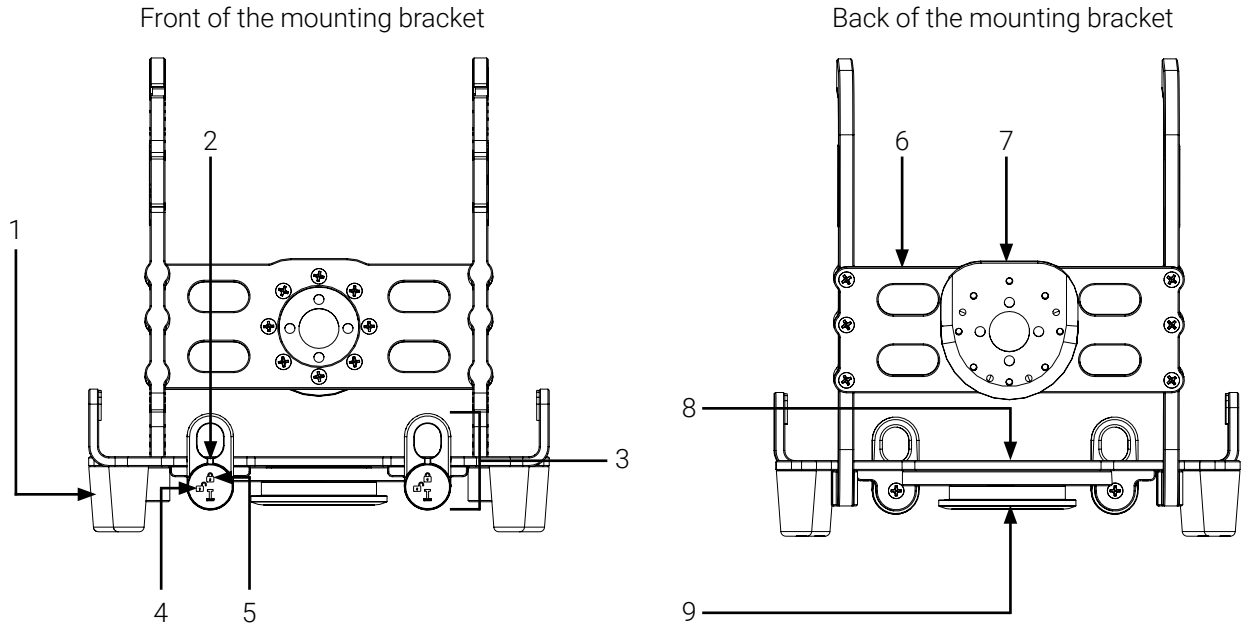

1. Foot (4X)
2. Position indicator (2X; 1 per rotary lock)
3. Rotary lock (2X)
4. «Unlocked» position marking (2X; 1 per rotary lock)
5. «Locked» position marking (2X; 1 per rotary lock)
6. Back plate
7. Anti-rotation micro disc
8. Bottom plate
9. Micro disc

Figure 8: BP60–FL components – micro disc and anti-rotation micro disc

© 2026 Technimount E.M.S. Holding Inc.

6. Illustrated Dimensions

The content in this section is intended for personnel who have a competent, proficient or advanced level of competency. Refer to the « User Competency » section on page 5 if needed.

Figure 9, Figure 10 and Figure 11 illustrate the dimensions of the BP60–FL.

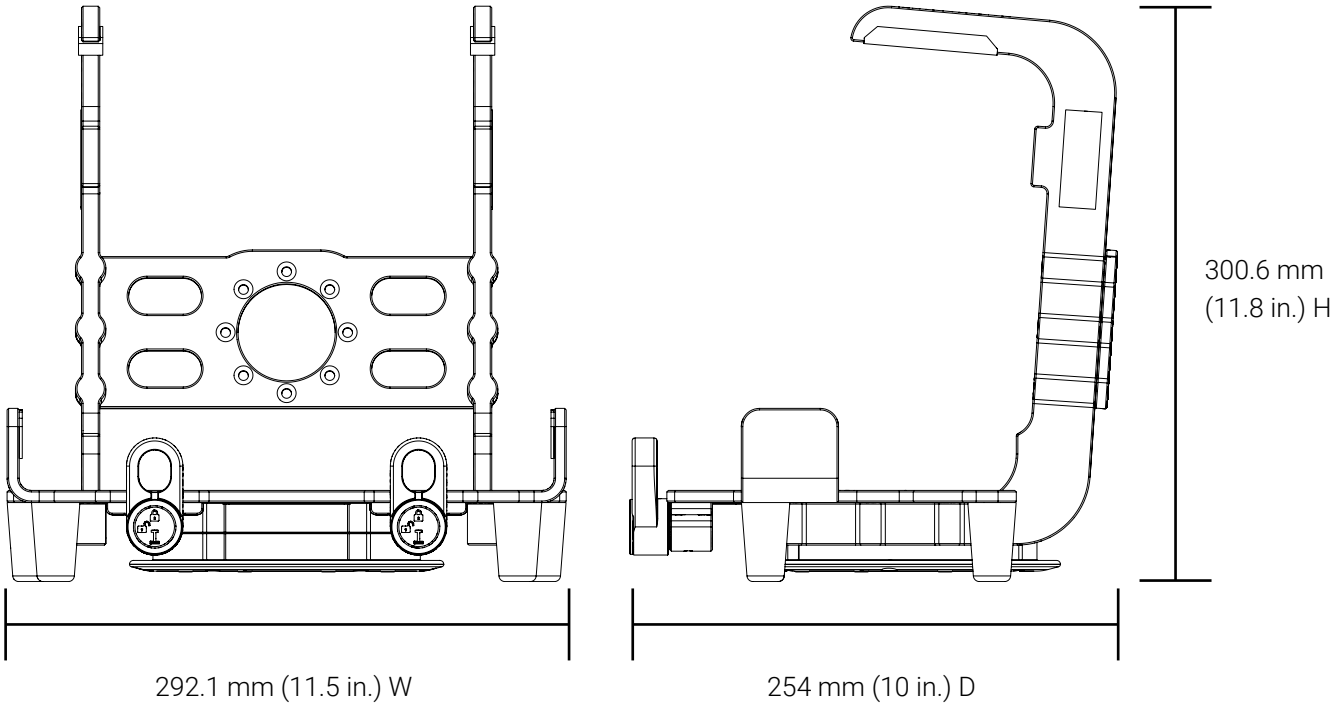

Figure 9: BP60–FL dimensions – standard bottom disc

© 2026 Technimount E.M.S. Holding Inc.

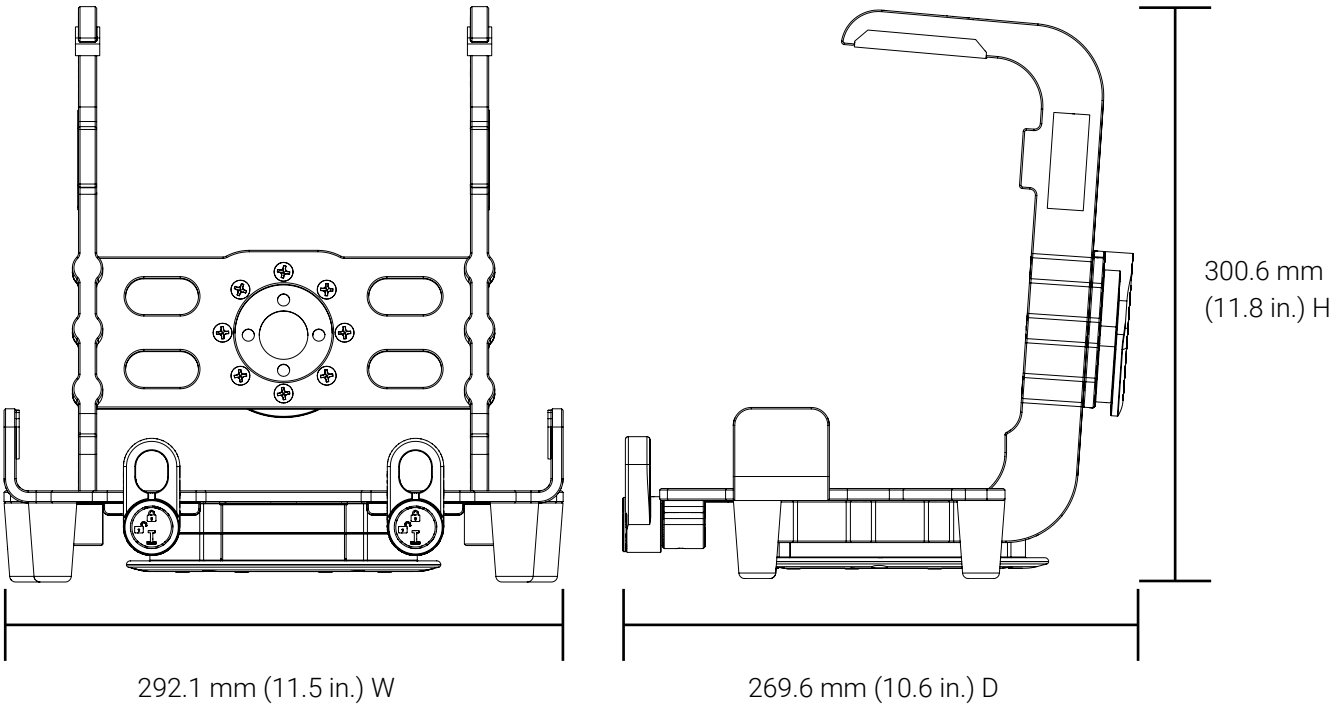

Figure 10: BP60–FL dimensions – standard bottom disc and anti-rotation micro disc

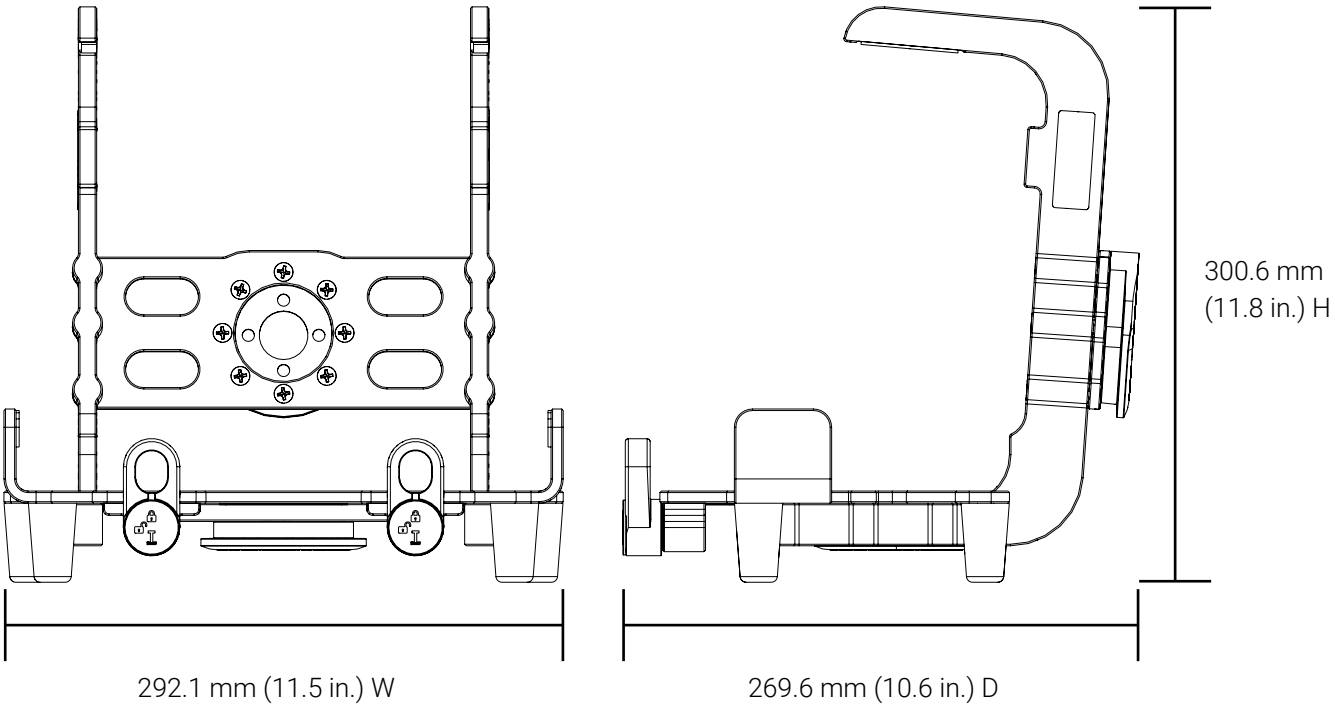

Figure 11: BP60–FL dimensions – micro disc and anti-rotation micro disc

© 2026 Technimount E.M.S. Holding Inc.

7. Safety Mechanism

The content in this section is intended for personnel who have a competent, proficient or advanced level of competency. Refer to the « User Competency » section on page 5 if needed.

The safety mechanism of the BP60–FL is composed of two (2) rotary locks:

- When the "Unlocked" icons (Figure 12A–1) of the both rotary locks are aligned with the position indicators (Figure 12A–2), the medical device is secured in the bracket.
- When the "Locked" icons (Figure 12B–3) of the both rotary locks are aligned with the position indicators (Figure 12B–4), the medical device can be removed from the bracket. Refer to the « Illustrated Parts » section on page 17 if needed.

(A) (B)

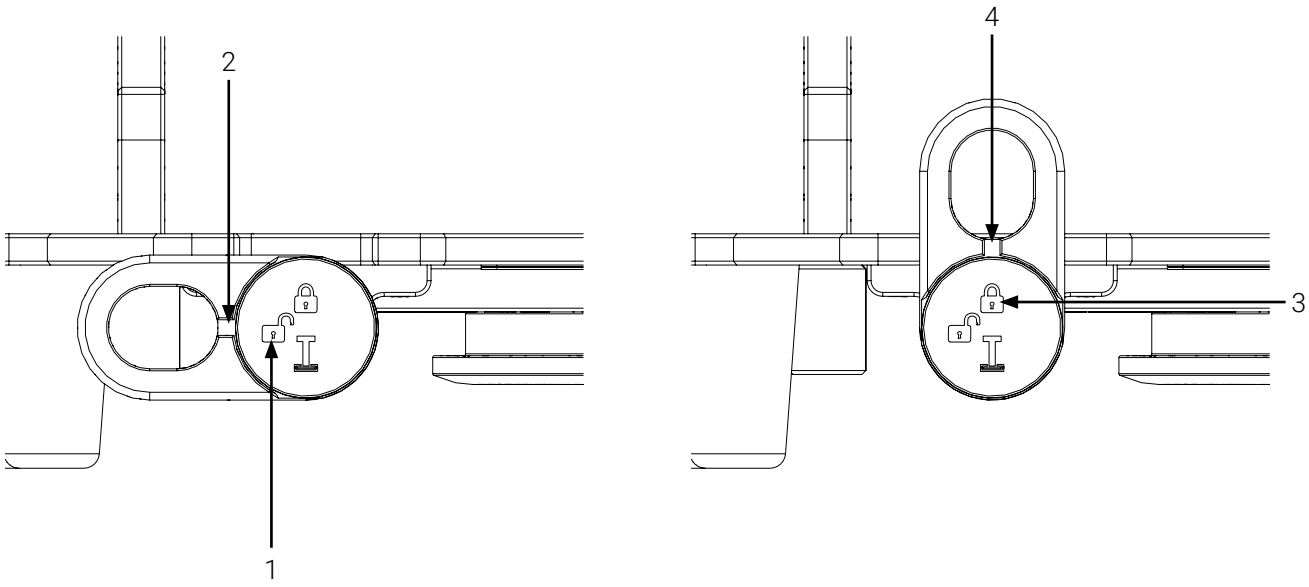

1. "Unlocked" icon
2. Position indicator aligned with the «Unlocked» icon
3. "Locked" icon
4. Position indicator aligned with the «Locked» icon

Figure 12: Rotary locks

© 2026 Technimount E.M.S. Holding Inc.

8. Operate the BP60–FL

The content in this section is intended for personnel who have a competent, proficient or advanced level of competency. Refer to the « User Competency » section on page 5 if needed.

NOTE : The illustrations herein are for user-comprehension purposes and may differ from your actual configuration. The instructions apply to any compatible mounting bracket and mounting system. Refer to their specific User Manual if needed.

8.1. Install the Hamilton-T1 Transport Ventilator in the BP60–FL

1. Rotate both rotary locks of the BP60–FL a quarter turn counterclockwise, until the «Unlock» icons are aligned with the position indicators if needed.
2. Align and insert the medical device in the mounting bracket horizontally, then push it until it is pressed against the back plate of the bracket (Figure 13A).
3. Rotate both rotary locks a quarter turn clockwise, until the «Lock» icons are aligned with the position indicators (Figure 13B).

(A) (B)

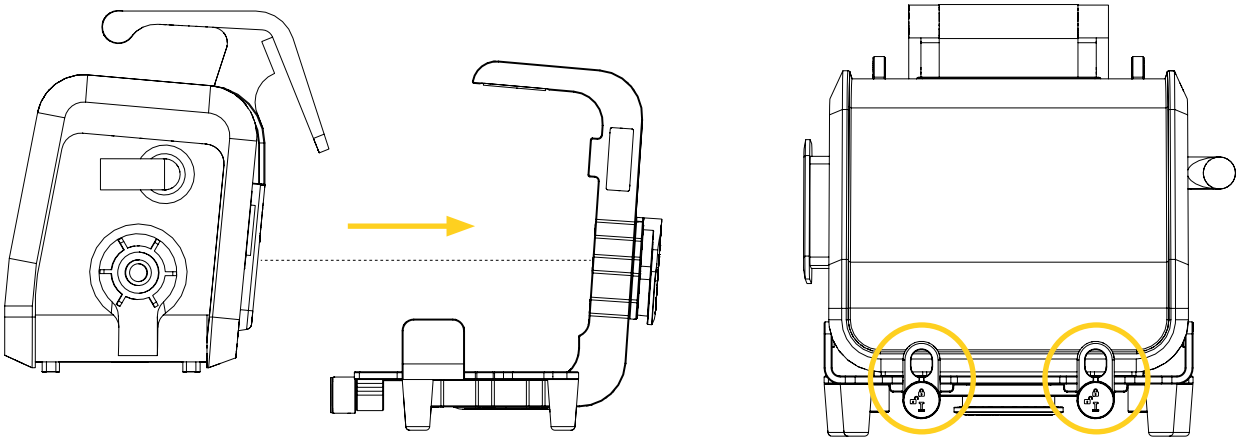

Figure 13: Installing the Hamilton-T1 Transport Ventilator in the BP60–FL

4. Move the medical device back and forth a few times to ensure it is locked and secured in the mounting bracket. If it stays in the bracket during the verification, it is locked and secured.

The installation of the Hamilton-T1 Transport Ventilator in the BP60–FL is complete.

© 2026 Technimount E.M.S. Holding Inc.

8.2. Remove the Hamilton-T1 Transport Ventilator from the BP60–FL

1. Rotate both rotary locks of the BP60–FL a quarter turn counterclockwise, until the «Unlock» icons are aligned with the position indicators (Figure 14A).
2. Pull the medical device out of the mounting bracket horizontally (Figure 14B).

(A) (B)

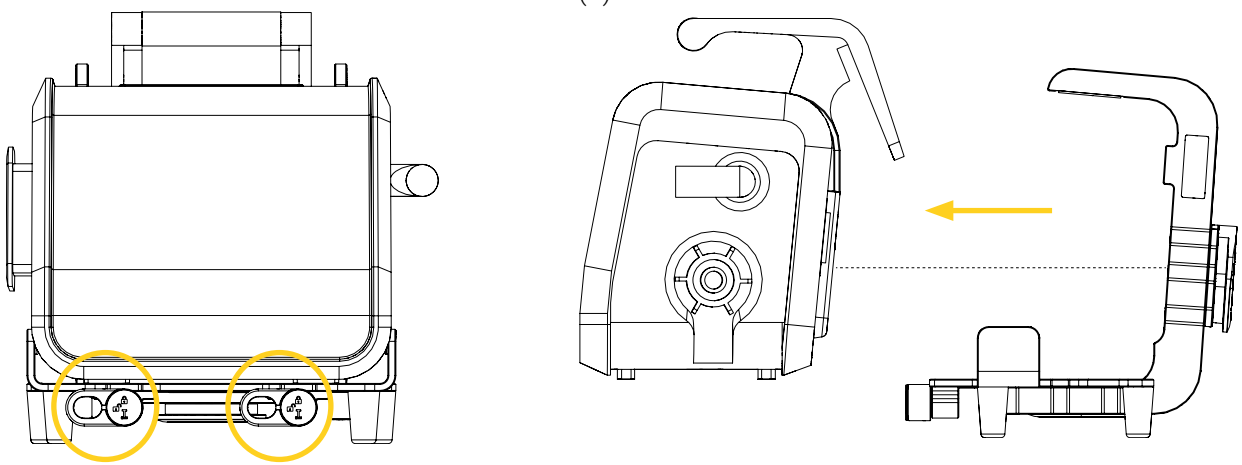

Figure 14: Removing the Hamilton-T1 Transport Ventilator from the Bracket Pro Serie 60 – FL or BP60–FL

3. Set the medical device aside on a clean surface, or place it in its dedicated storage space. Refer to your established internal protocols if needed.

The removal of the Hamilton-T1 Transport Ventilator from the BP60–FL is complete.

© 2026 Technimount E.M.S. Holding Inc.

8.3. Install the Hamilton-T1 Transport Ventilator in the Mounting System

1. Ensure that the Hamilton-T1 Transport Ventilator is locked and secured in the BP60–FL Refer to the « Install the Hamilton-T1 Transport Ventilator in the BP60–FL » section on page 23 if needed.
2. Align and insert the disc located under the mounting bracket of the medical device in the mounting system horizontally (Figure 15) or the disc located behind the mounting bracket of the medical device in the mounting system vertically, until it locks (Figure 16).

(A) (B)

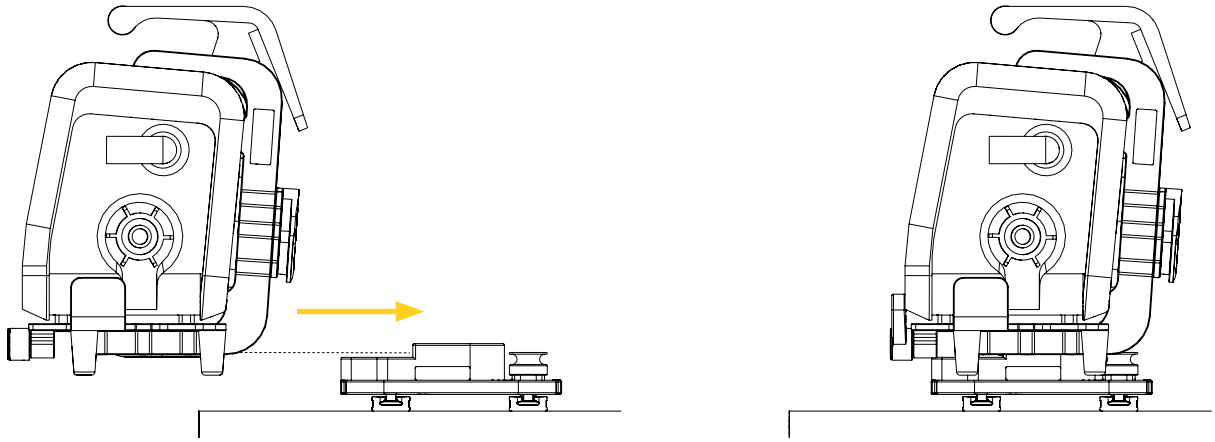

Figure 15: Installing the Hamilton-T1 Transport Ventilator in the mounting system – horizontally

(A) (B)

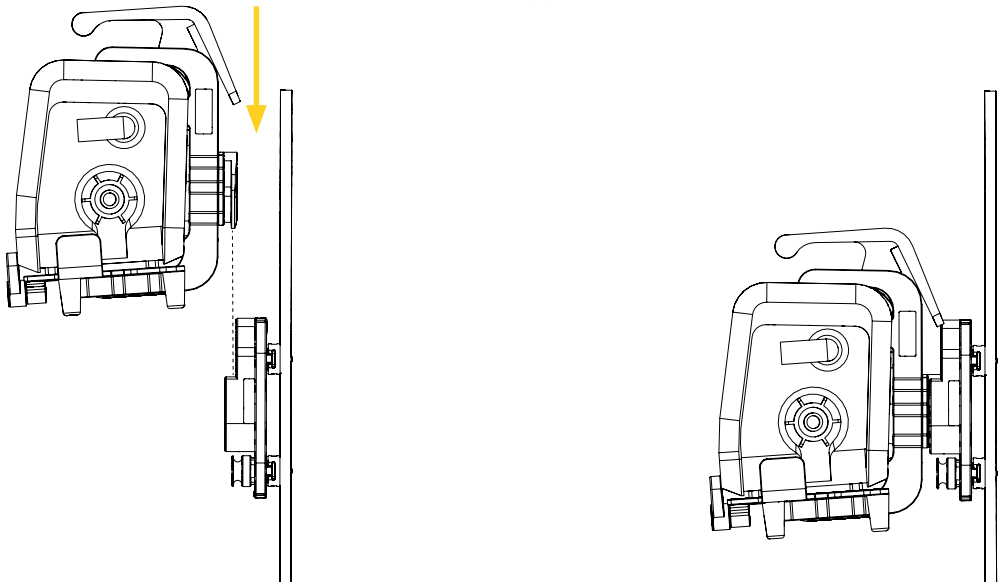

Figure 16: Installing the Hamilton-T1 Transport Ventilator in the mounting system – vertically

3. Move the medical device back and forth or up and down a few times to ensure it is locked and secured in the mounting system. If disc of the mounting bracket stays in the mounting system during the verification, it is locked and secured.

© 2026 Technimount E.M.S. Holding Inc.

4. For medical devices installed in a mounting system horizontally, turn the medical device up to 360° clockwise or counterclockwise, to the desired position (Figure 17).

(A) (B) (C)

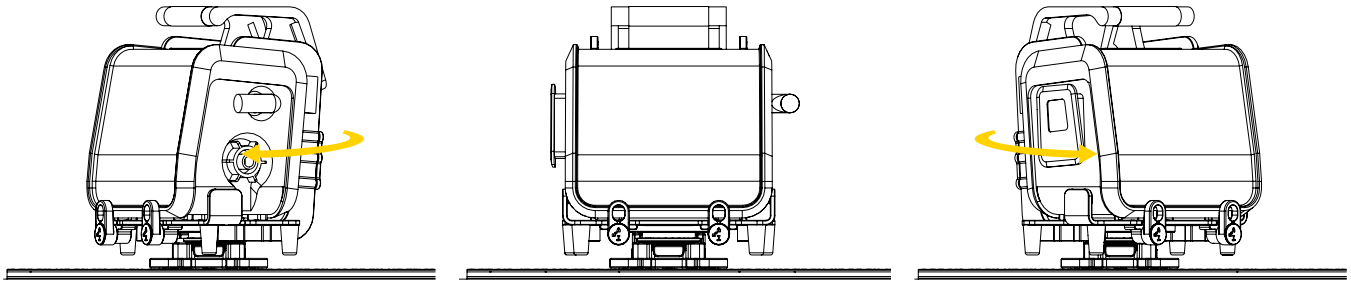

Figure 17: Rotating the Hamilton-T1 Transport Ventilator

The installation of the Hamilton-T1 Transport Ventilator in the mounting system is complete.

8.4. Remove the Hamilton-T1 Transport Ventilator from the Mounting System

1. Ensure that the Hamilton-T1 Transport Ventilator is locked and secured in the BP60–FL Refer to the « Install the Hamilton-T1 Transport Ventilator in the BP60–FL » section on page 23 if needed.
2. Press and hold the quick-release button of the mounting system, then slide the disc located under the mounting bracket of the medical device out of the base horizontally (Figure 18) or the disc located behind the mounting bracket of the medical device out of the base vertically (Figure 19).

(A) (B)

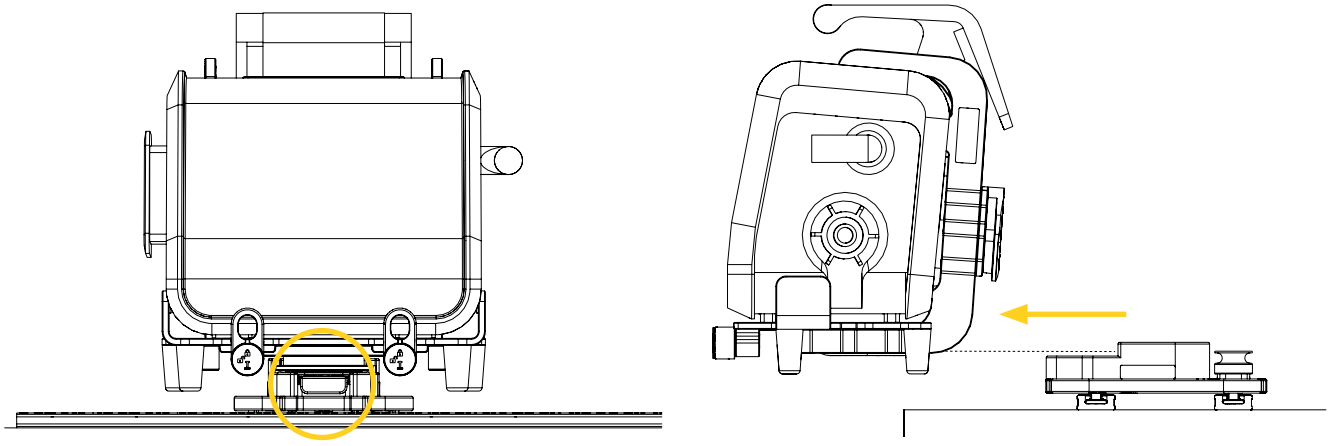

Figure 18: Removing the Hamilton-T1 Transport Ventilator from the mounting system – horizontally

© 2026 Technimount E.M.S. Holding Inc.

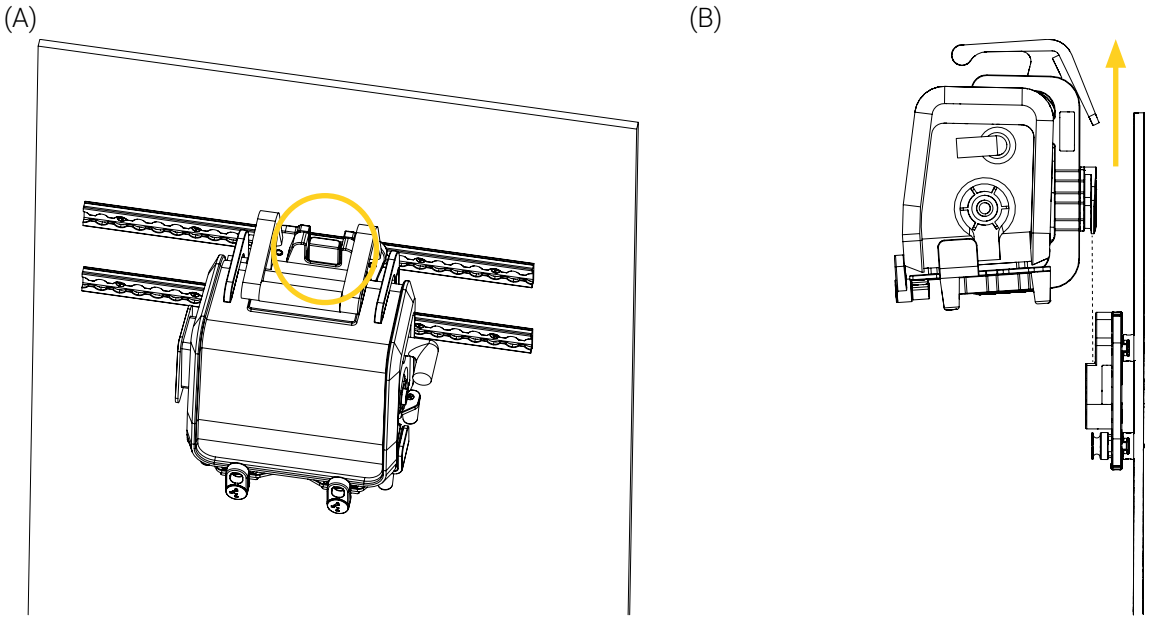

Figure 19: Removing the Hamilton-T1 Transport Ventilator from the mounting system – vertically

3. Set the medical device aside on a clean surface, or place it in its dedicated storage space. Refer to your established internal protocols if needed.

The removal of the Hamilton-T1 Transport Ventilator from the mounting system is complete.

© 2026 Technimount E.M.S. Holding Inc.

Annex I Skills Assessment of the EMS and Clinical Personnel



The content in this section is intended for personnel who have a proficient level of competency. Refer to the « User Competency » section on page 5 if needed.

Following training, a skills assessment should be given to each member of the EMS and clinical personnel to ensure they have fully comprehended the labelling, warnings and cautions, potential risks, safe practices and proper operating procedures needed to safely and effectively use the BP60–FL. Consider adding the following to your internal training protocols.

Trainee name: _____ Unit: _____

Assessor name: _____ Date: _____

SKILLS ASSESSMENT		
SKILL CRITERIA	PASSED	FAILED
Labelling		
- Able to identify meaning and potential risks associated with the different safety labels:		
- Manufacturing label	☐	☐
- Safe Working Load (SWL)	☐	☐
- "Locked" 🔒/"Unlocked" 🔓 operation markings (2X; 1 per rotary lock)	☐	☐
Safety Measures		
- Knows that **under no circumstances** should the BP60–FL be installed on, connected to, or used in combination with any third party/competitor mounting system, mounting bracket, medical device or similar equipment.	☐	☐
- Knows that the BP60–FL was specifically engineered to be used with the Hamilton-T1 Transport Ventilator and that using any other medical device may cause the equipment to fall, operate unpredictably, or fail.	☐	☐
- Knows **not to use** the BP60–FL if there are any loose or missing screws.	☐	☐
- Knows to immediately stop using the BP60–FL if any serious incident occurs and to inform authorized personnel.	☐	☐
- Knows to always wait until the transport vehicle is immobilized before manipulating installing/removing the medical device in/from the BP60–FL.	☐	☐
- Knows to always ensure that the medical device is secured in the BP60–FL before installing/removing the BP60–FL in/from the mounting system.	☐	☐

© 2026 Technimount E.M.S. Holding Inc.

SKILLS ASSESSMENT		
SKILL CRITERIA	PASSED	FAILED
- Knows to always pay close attention **not to wedge** the power cords or tubing during the installation/removal of the medical device in/from the BP60–FL and/or the BP60–FL in/from the mounting system.	☐	☐
- Knows to always pay close attention to the safety mechanisms of the BP60–FL.	☐	☐
- Knows to always practice safely operating the BP60–FL until the manipulations have been perfected, before use with patients and that improper use of the mounting bracket may cause damage or the equipment to fall or operate unpredictably.	☐	☐
- **Knows not to overload or exceed** the total Safe Working Load (SWL) of the BP60–FL.	☐	☐
- Knows that the Safe Working Load (SWL) of the BP60–FL **does not override** the maximum load capacity of another Technimount product or system, neither those of the medical devices, accessories.	☐	☐
- Knows to always refer to their established internal protocols, as well as read and abide by the safety guidelines and instructions provided in the user documentation of the BP60–FL, the mounting system and the Hamilton-T1 Transport Ventilator.	☐	☐
Operation		
- Able to install/remove the Hamilton-T1 Transport Ventilator in/from the BP60–FL.	☐	☐
- Able to install/remove the BP60–FL in/from the mounting system.	☐	☐
- Able to rotate the Hamilton-T1 Transport Ventilator (applicable to medical devices installed in a mounting system horizontally).	☐	☐

© 2026 Technimount E.M.S. Holding Inc.

Annex II Unpack the BP60–FL



The content in this section is intended for personnel who have an advanced level of competency. Refer to the « User Competency » section on page 5 if needed.

1. Inspect the shipping box(es) for signs of damage before accepting shipment. Take pictures and report them promptly if applicable.
2. Move the shipping box(es) to the location of the installation.
3. Open the shipping box(es).
4. Unpack the box(es) and ensure that all shipping and packaging materials have been properly removed, prior to installation.

   NOTE : Keep all packaging material for future use.
5. Identify the item(s) included in the shipping box(es), then set them aside.
6. Inspect the item(s) for signs of damage. Take pictures and report them promptly if applicable.

© 2026 Technimount E.M.S. Holding Inc.

Annex III Maintenance



The content in this section is intended for personnel who have an advanced level of competency. Refer to the « User Competency » section on page 5 if needed.

Factors such as weather, environment, geographical location and individual usage will necessitate different needs. For the maintenance of the BP60–FL, follow the guidelines listed herein and in accordance with your service's current maintenance practices and established internal protocols. Please contact Technical Support at techsupport@technimount.com for replacement parts or repair related issues, if needed.



WARNING – General Warning

- **Do not perform** the safety checks or the condition-based maintenance before having read the entire « Safety Measures » section on page 12 and the maintenance specific safety measures in this section, having read the entire content of this user manual, having gained in-depth knowledge and product comprehension, as well as having familiarized yourself with the standards and guidelines.
- Safety checks and a condition-based maintenance plan are required and should be established for all Technimount products.
- Perform the safety checks and maintenance operations as described herein. Failing to follow the recommended maintenance plan or its guidelines could cause premature damage to the product.
- Use only Technimount parts, maintenance procedures, cleaning solutions and lubricants (if applicable), as described herein. Using unapproved modified parts or procedures for the maintenance of the Technimount product may cause the system to be unstable and could cause injury to the patients or EMS and clinical personnel and void the product warranty.
- Replace damaged or worn-out parts if past their expected service life or when damaged (refer to the « Replacement Parts/Kits » section on page 39). Recycle damaged parts or dispose according to the environmental laws that apply to your jurisdiction and consult the Safety Data Sheets (SDS).



CAUTION – Safe Handling and Operation

- **Do not use** unauthorized, untested or unapproved cleaning products and disinfectants to perform condition-based maintenance, to avoid damaging the surface of your Technimount product and void the warranty. Technimount will not be held liable for damages resulting from the use of an unauthorized, untested or unapproved cleaning product.
- **Do not use** powered tools to screw the hardware during installation, as there is a risk of damage to the threads.
- **Do not steam clean or use ultrasonic cleaners** on the system or any of its components.
- **Do not immerse** the metal parts/components in water.
- To spot clean, the maximum water temperature should not exceed 82° C (180° F). The maximum water pressure should not exceed 1500 psi/103.5 BAR. If using a high pressure washer, the pressure nozzle must be kept a minimum of 609.6 mm (24 in.) from the product.
- When cleaning, always use the appropriate Personal Protection Equipment (PPE) based on your established internal protocols (e.g., gloves, eyewear, etc.).

© 2026 Technimount E.M.S. Holding Inc.



CAUTION – Corrosion

- Always rinse and dry the BP60–FL components properly after using cleaning products. Certain types of cleaners may leave a corrosive residue on the surface of the product and could cause the premature corrosion of critical components. Refer to the product Safety Data Sheets (SDS) for chemical information or handling, storage and emergency measures in case of accident.
- Dispose of corrosive wastes according to the environmental laws that apply to your jurisdiction and consult the Safety Data Sheets (SDS).



CAUTION – Follow Instructions for Use

Always read and abide by all the safety guidelines identified, as well as follow all of the instructions provided by the manufacturer of the cleaning product.

Maintenance Frequency

- Safety checks and the condition-based maintenance should be performed minimally every month or as frequently needed, to prolong the longevity of the BP60–FL in optimal conditions.
- Decontaminate the BP60–FL as recommended in your established internal protocols, as well as the regulations and standards in virtue of the infection prevention and control procedures.

Customer-Provided Tools

- Clean and dry cloth
- Soft brush
- Pressure washer
- Cleaning solutions
- Phillips-head screwdriver #2 and #3
- Medium strength thread lock adhesive ( )

Tested and Approved Cleaning Solutions

- Oxivir, 5% Hydrogen Peroxide with Peracetic Acid (AHP)
- Lavo 12, 10 000 ppm Sodium Hypochlorite
- TNT-100, 5% Quaternary Ammonium Compound
- Spectro-Sept, 5% Ethyl Alcohol
- Spectrol, 5% EDTA salt

© 2026 Technimount E.M.S. Holding Inc.

Maintenance Plan

1. Check the boxes upon completion of the « Safety Checks » section on page 33 and the « Condition-Based Maintenance » section on page 34, then add your comments and/or observations in the « Maintenance Log » section on page 35 if needed. In case of a non-conformity, immediately stop using the BP60–FL and contact Technical Support at techsupport@technimount.com for a remedial action plan.
2. Keep records of your maintenance activities.

SAFETY CHECKS	CHECKED
BP60–FL (Figure 20, Figure 21 and Figure 22)	
- Visually inspect all the components of the BP60–FL to ensure that the hardware is in good condition and there are no loose screws. • *If the hardware is not in good condition, replace it. Contact Technical Support if needed.* • *If the screws are loose, there is a non-conformity.*	☐
- Visually inspect all the components of the BP60–FL to ensure there is no chemical attack. • *If there are traces of chemical attack, clean the mounting bracket. Refer to the « Condition-Based Maintenance » section on page 34 if needed.*	☐
- Visually inspect feet of the BP60–FL to ensure there is wear and/or damage. • *If there are signs of wear and/or damage, replace the foot/feet. Refer to the « Replacement Parts/Kits » section on page 39 if needed.*	☐
- Rotate the rotary locks of the BP60–FL clockwise and counterclockwise a few times to ensure proper functioning of the safety mechanism of the mounting bracket. • *If the rotary locks do not easily rotate and/or you feel resistance when doing so, there is a non-conformity.*	☐
- Install and remove the the BP60–FL a few times to ensure proper functioning of the safety mechanism of the mounting bracket. • *If the medical device does not lock and/or unlock when using the rotary locks of the mounting bracket, replace the rotary lock(s). Refer to the « Replacement Parts/Kits » section on page 39 if needed.*	☐
- Insert and remove the medical device in/from the mounting system horizontally and/or vertically a few times to ensure proper functioning of the safety mechanism of the mounting system. • *If the medical device moves and/or does not stay in the mounting system during the verification after correctly having been installed and having heard the click sound, there is a non-conformity.*	☐
- Insert the medical device in the mounting system horizontally and turn it clockwise and counterclockwise a few times to ensure proper functioning of the mounting bracket's mechanism. • *If the medical device does not easily rotate from left to right and/or you feel resistance when doing so, there is a non-conformity.*	☐

© 2026 Technimount E.M.S. Holding Inc.

SAFETY CHECKS	CHECKED

- Visually inspect the manufacturing label to ensure that specifications are still legible and that the BP60–FL has not passed its expected service life. Refer to the « Labels » section on page 10 and the « Technical Specifications » section on page 14 if needed. ☐
  - *If the specifications are illegible and/or the estimated period of safe and reliable use has passed, there is a non-conformity.*
- Visually inspect the safety labels and operation markings to ensure that they are still legible and all accounted for. Refer to the « Labels » section on page 10 and the « Technical Specifications » section on page 14 if needed. ☐
  - *If the specifications are illegible and/or missing, there is a non-conformity.*

CONDITION-BASED MAINTENANCE	CHECKED

Clean the BP60–FL, after you have completed the safety checks: ☐

1. Remove the excess dirt using a clean cloth, if needed.
2. Remove the contaminants using a pressure washer or as recommended in your established internal protocols and control procedures.
3. Clean using a cloth and cleaning solution.
4. Spot clean stains by applying the solution directly on the stain and let sit on the surface, if needed.

   NOTE : Avoid over saturation and ensure that the product **does not sit** on the surface of the BP60–FL components longer than recommended by the cleaner's manufacturer.

5. Thoroughly rinse the solution with a clean cloth dampened with lukewarm water, then dry all the components using a clean cloth before returning to service.

Clean the mounting system(s), after you have completed the safety checks and conditioned-based maintenance of the BP60–FL. Refer to the specific User Manual(s) if needed. ☐

© 2026 Technimount E.M.S. Holding Inc.

MAINTENANCE LOG

Add your comments and/or observations, after you have completed the safety checks and condition-based maintenance, if needed:

Maintenance plan completed on (dd/mm/yyyy): _____

Maintenance plan completed by: _____

© 2026 Technimount E.M.S. Holding Inc.

Illustrated Inspection Points

Figure 20, Figure 21 and Figure 22 illustrate the inspection points of the BP60–FL.

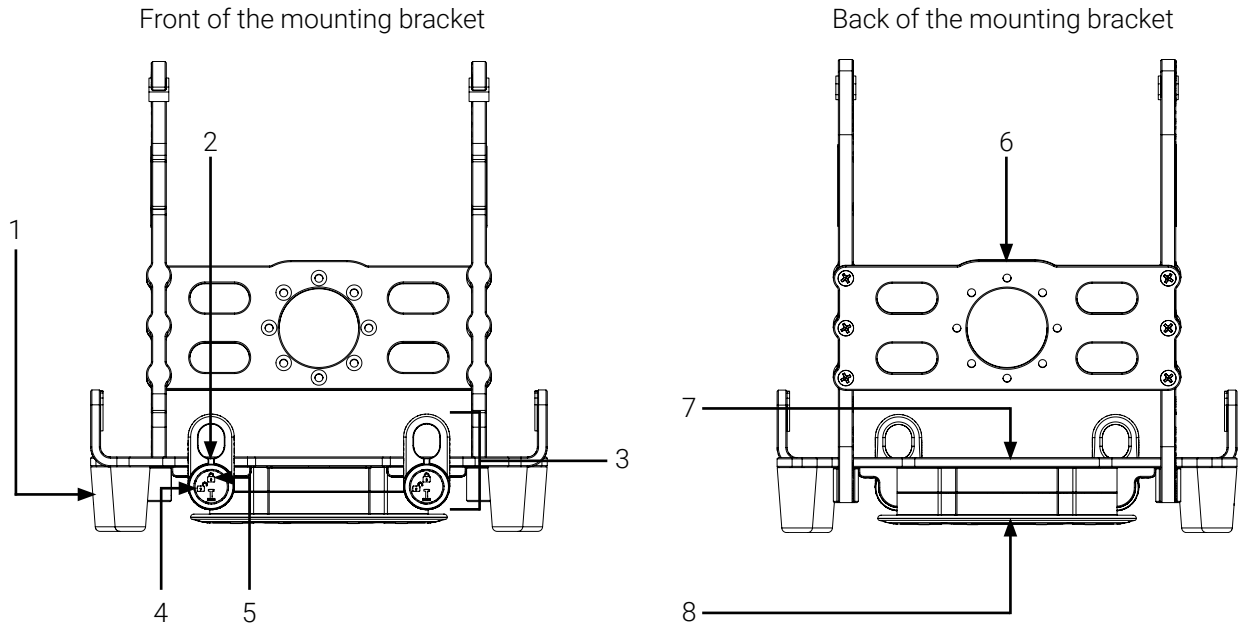

1. Foot (4X)
2. Position indicator (2X; 1 per rotary lock)
3. Rotary lock (2X)
4. «Unlocked» position marking (2X; 1 per rotary lock)
5. «Locked» position marking (2X; 1 per rotary lock)
6. Back plate
7. Bottom plate
8. Standard bottom disc

Figure 20: Illustrated inspection points – standard bottom disc

© 2026 Technimount E.M.S. Holding Inc.

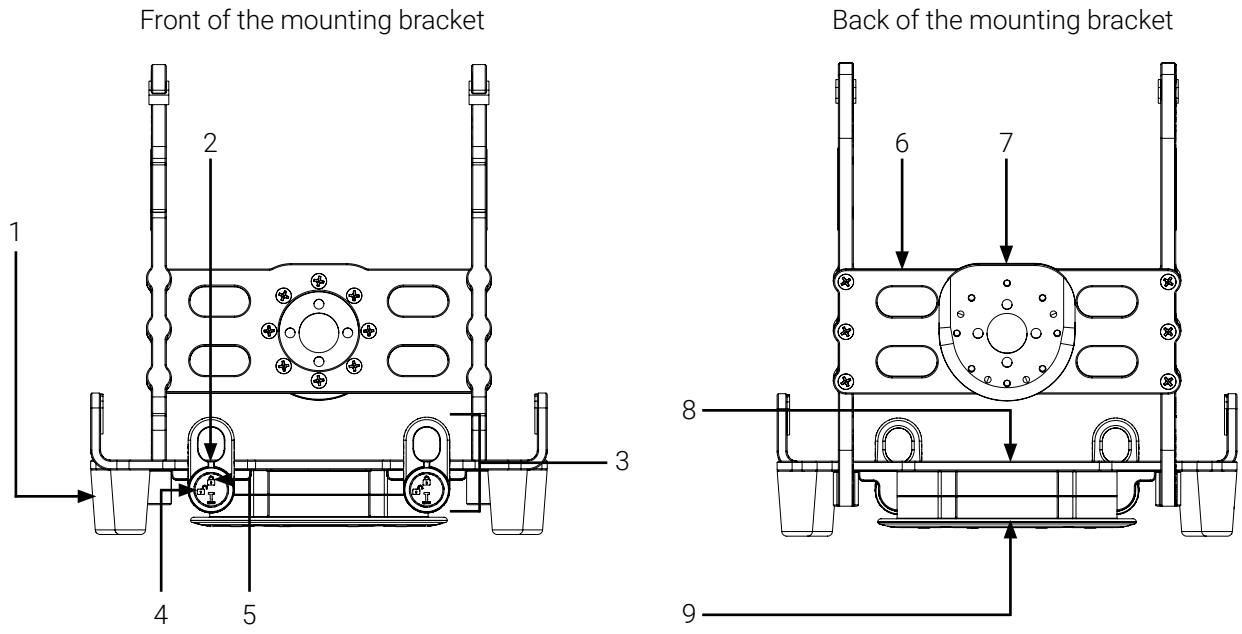

1. Foot (4X)
2. Position indicator (2X; 1 per rotary lock)
3. Rotary lock (2X)
4. «Unlocked» position marking (2X; 1 per rotary lock)
5. «Locked» position marking (2X; 1 per rotary lock)
6. Back plate
7. Anti-rotation micro disc
8. Bottom plate
9. Standard bottom disc

Figure 21: Illustrated inspection points – standard bottom disc and anti-rotation micro disc

© 2026 Technimount E.M.S. Holding Inc.

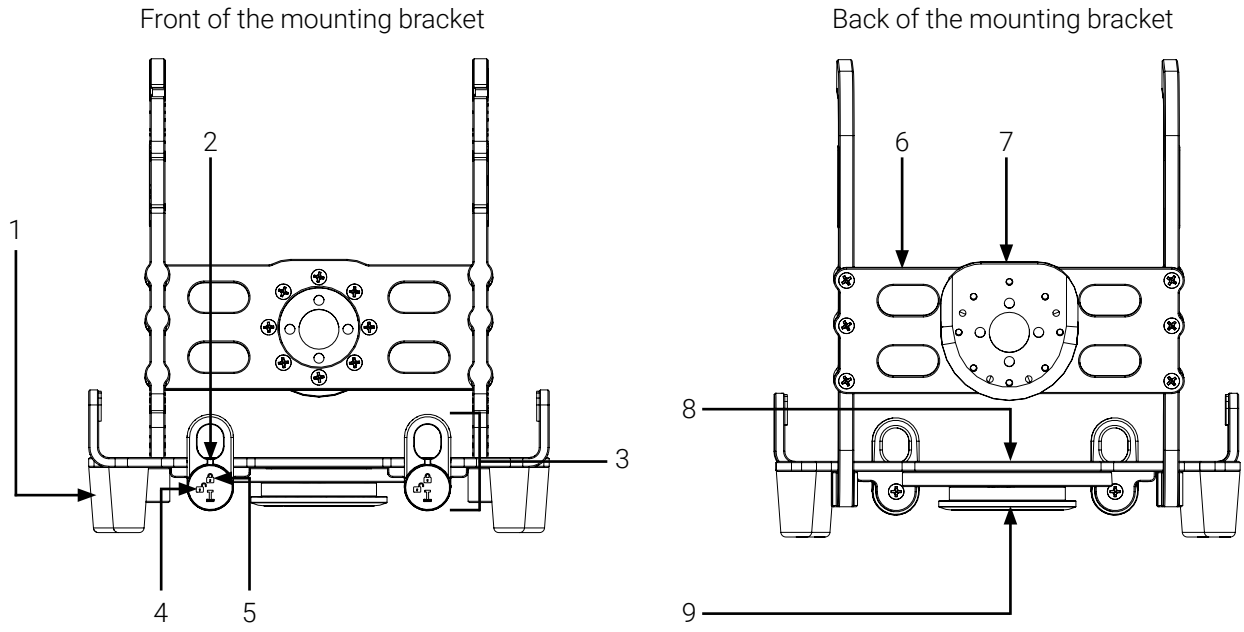

1. Foot (4X)
2. Position indicator (2X; 1 per rotary lock)
3. Rotary lock (2X)
4. «Unlocked» position marking (2X; 1 per rotary lock)
5. «Locked» position marking (2X; 1 per rotary lock)
6. Back plate
7. Anti-rotation micro disc
8. Bottom plate
9. Micro disc

Figure 22: Illustrated inspection points – micro disc and anti-rotation micro disc

© 2026 Technimount E.M.S. Holding Inc.

Annex IV Replacement Parts/Kits



The content in this section is intended for personnel who have a proficient or advanced level of competency. Refer to the « User Competency » section on page 5 if needed.

Technimount reserves the right to change part numbers and products without notice. Please contact Customer Service at customerservice@technimount.com to ensure product options and availability, or Technical Support at techsupport@technimount.com for replacement parts/kits or repair related issues.

REFERENCE #	PART/KIT #	PART/KIT DESCRIPTION	REPLACEMENT PROCEDURE
Figure 20, #3 Figure 21, #3 Figure 22, #3	9001-10-UN	Rotary Lock kit	Refer to the IN-RPRC-RL-202607EN-01 replacement procedure
Figure 20, #1 Figure 21, #1 Figure 22, #1	923-00-1625-INS	1-1⁄8 in. acetal foot	Refer to the IN-RPRC-FEET-202605EN-04 replacement procedure

© 2026 Technimount E.M.S. Holding Inc.

TECHNIMOUNT
EMS®

SAFETY AND FLEXIBILITY WHERE IT MATTERS MOST

© 2026 Technimount E.M.S. Holding Inc. | technimount.com