TECHNIMOUNT
EMS®

BRACKET PRO SERIE® 27 – FL

USER MANUAL

AIRPLANES/ROTOCRAFTS
FAA
14 CFR
TECHNIMOUNT ENGINEERING

SAFETY AND FLEXIBILITY
WHERE IT MATTERS MOST

Copyrights

Copyright 2025 Technimount E.M.S. Holding Inc. is an affiliated company of Technologies CGC Inc. All Rights Reserved. No part of this publication may be reproduced, transmitted, transcribed, backed-up on a retrieval system, translated in any language, modified in any form or by any means, without the written permission of Technimount or its affiliate companies.

Trademarks

Product and medical device manufacturer names are Trademarks™ or Registered Trademarks® of their respective holders.

- Technimount EMS® and Bracket Pro Serie® are registered trademarks of Technologies CGC Inc.
- ZOLL Zenix® is a registered trademark of ZOLL Medical Corporation.
- Oxivir® is a registered trademark of Diversey.
- Lavo® is a registered trademark of KIK Holdco Company, Inc.

For any issues with your Technimount product, its components, or for any technical questions during the installation, operation, or maintenance, please contact Technical Support at techsupport@technimount.com.

Contact Information

Technimount E.M.S. Holding Inc.

C/O: Regulatory Affairs

3770 Jean Marchand Street, Suite 100-C

Quebec (Quebec) G2C 1Y6

Canada

customerservice@technimount.com

techsupport@technimount.com

legal@technimount.com

www.technimount.com

T + 1 581 700-6613

SF + 1 888 639-2758 (North America)

Table of Contents

Copyrights ..... **ii**
Trademarks ..... **ii**
Contact Information ..... **ii**
1. General Mentions and Considerations **5**
..... 1.1. Intended Use 5
..... 1.2. User Competency 5
..... 1.3. Warranties 6
..... 1.3.1. Warranty Policy 6
..... 1.3.2. Limited Warranty 6
..... 1.3.3. International Warranty Clause 6
..... 1.3.4. User Liability 7
..... 1.4. Claims 7
..... 1.4.1. Damaged or Defective Merchandise 7
..... 1.4.2. Return Policy 7
..... 1.4.3. Return of Material Authorization (RMA) 8
..... 1.4.4. Claim Process 8
2. General Safety Guidelines **9**
..... 2.1. Symbols and Definitions 9
..... 2.2. Labels 10
..... 2.3. Safety Measures 11
3. Technical Specifications **12**
4. Bracket Pro Serie 27 – FL Orientation Diagrams **13**
5. Bracket Pro Serie 27 – FL Illustrated Parts **14**
6. Bracket Pro Serie 27 – FL Illustrated Specifications **15**
7. Operate the Bracket Pro Serie 27 – FL **16**
..... 7.1. Install the Bracket Pro Serie 27 – FL on the Mounting System 16
..... 7.2. Remove the Bracket Pro Serie 27 – FL from the Mounting System 17
Annex I Skills Assessment of the EMS and clinical personnel **19**
Annex II Unpack the Bracket Pro Serie 27 – FL **21**
Annex III Install the ZOLL Zenix on the Bracket Pro Serie 27 – FL **23**
Required Installation Time **23**
..... Required Tools 23

© 2025 Technimount E.M.S. Holding Inc.

..... Install the Medical Device on the Mounting Bracket 23
Annex IV Maintenance 27
..... Maintenance Frequency 28
..... Required Tools 28
..... Tested and Approved Cleaning Solutions 28
..... Maintenance Plan 29
..... Safety Checks 29
..... Condition-Based Maintenance 29
..... Maintenance Log 30
..... Illustrated Inspection Points 31
Annex V Replacement Parts/Kits 33

© 2025 Technimount E.M.S. Holding Inc.

1. General Mentions and Considerations

The Bracket Pro Serie 27 – FL user manual includes detailed product information, standards and guidelines to assist the administrator/manager/supervisor and biomedical technician (or equivalent) with the unpacking, assembling (when indicated) and maintenance of the Technimount product. It also includes specific user-related information to assist trained EMS and clinical personnel with effectively operating the mounting bracket.

Please read the user manual thoroughly to fully assess, comprehend, then relay its content to EMS and clinical personnel during training, to warn them of any potential danger of its abuse, how to safely use the product and provide a safe environment for patients as well as themselves. Your established internal protocols should be updated to include the Technimount product(s) standards, guidelines, requirements and safety recommendations included within this documentation. The user manual should remain available to users when needed and relayed if the product is subsequently sold.

NOTE : Technimount continually seeks advancements in product design and quality. While the user manual contains the most updated product information available at the time of printing, it may contain minor differences from the current version, including image references. For more information, please contact Technical Support at techsupport@technimount.com.

NOTE : Technimount reserves the right to change part numbers and products without notice. Please contact Customer Service at customerservice@technimount.com to ensure product options and availability.

1.1. Intended Use

The Bracket Pro Serie 27 – FL is designed to aid trained EMS and clinical personnel secure and move in airplanes and helicopters a ZOLL Zenix monitor/defibrillator, with or without its accessory bags, during air emergency medical services and critical care transport.

1.2. User Competency

To safely operate the Bracket Pro Serie 27 – FL, EMS and clinical personnel must have the required skill level. Training should be given to EMS and clinical personnel, taking in account the skill level that is necessary to comply with their function and level of interaction with the mounting bracket:

- **Proficient (trained EMS and clinical personnel):** Has received the required training, is sufficiently knowledgeable to safely operate the product and have passed the skills assessment (refer to the « Skills Assessment of the EMS and clinical personnel » section on page 19).

  NOTE : Any member of the EMS and clinical personnel who has not received the required training and lacks the knowledge needed to safely operate the mounting bracket must not use the product.

- **Expert (administrator/manager/supervisor):** Has in-depth knowledge and product comprehension, and is familiar with standards and guidelines. Skilled to train EMS and clinical personnel on how to safely use the product.

© 2025 Technimount E.M.S. Holding Inc.

- **Advanced (biomedical technician or equivalent):** Has extensive mechanical experience. Skilled to perform the unpacking, assembly, safety checks and condition-based maintenance procedures as detailed herein, or the basic troubleshooting, upgrade and/or replacement procedures if applicable.

1.3. Warranties

1.3.1. Warranty Policy

This statement constitutes Technimount's entire warranty policy with regards to Technimount products. Technimount makes no other warranty or representation, neither expressed nor implied, except as stated herein. There is no warranty of merchantability or warranty of fitness for any particular purpose. Under no circumstances will Technimount be held liable hereunder for incidental or consequential damages, arising from or in any manner, related to sales or use of any such product.

Technimount E.M.S. Holding Inc. guarantees to the original "Purchaser" of the "Product" with which this "Limited warranty" is included, that the product will be free from "Defects" in workmanship and materials under normal use for a "Warranty period" of one (1) year from the product purchase date by the purchaser. During the warranty period, the product will be repaired or replaced according to the "Limited warranty" without charge to the purchaser for parts or labor. The parts and product may be repaired or replaced with new or refurbished parts or products. Herein this Limited Warranty, "Refurbished" means parts and products which have been returned to the factory, specifically. If the product is repaired or replaced within the warranty period, the greater of the remaining warranty period will apply, or three (3) months from the date of repair or replacement. If the product is repaired or replaced after the warranty period has expired, the warranty period for the repair or replacement will expire three (3) months after the repair or replacement date.

1.3.2. Limited Warranty

Technimount products are intended to secure in place medical devices only in the case of a single emergency landing, and must thereafter be immediately replaced. If the end user uses a Technimount product following an emergency landing, it is at the end user's own risk, and Technimount will not be held liable.

The limited warranty does not apply to normal wear that could result from normal use. It does not apply when the product or any of its components have been disassembled or repaired by someone not authorized by "Technimount". It does not cover repair or the replacement of any product or part thereof damaged by neglect, misuse, moisture, liquids, exposure to heat, accidents, abuse, and non-compliance with the instructions for installation and use provided with the product. It does not cover physical damage to the surface of the product. The decision to repair, replace or refuse the coverage is final and at the sole discretion of Technimount, without any compensation or obligation from Technimount. The product, defined as a "mounting bracket" or "bracket", is specifically designed to secure and move a ZOLL Zenix monitor/defibrillator with or without its accessory bags, and should only be used to fill this requirement. Any other use will void the warranty and Technimount shall not be held liable on any claim if the product has been modified or adapted for use.

1.3.3. International Warranty Clause

This warranty abides by the Canadian domestic policy. Warranty outside Canada may vary by country. Please contact Customer Service at customerservice@technimount.com for more information.

© 2025 Technimount E.M.S. Holding Inc.

1.3.4. User Liability

The purchaser and administrator are responsible to validate regulations and standards for safety in their region, to comply with applicable safety regulations. Technimount is not responsible to inform the purchaser or the administrator of any applicable legislation for safety in their area.

The administrator is responsible for providing proper training to any personnel who will install, operate and perform maintenance on Technimount products.

1.4. Claims

1.4.1. Damaged or Defective Merchandise

ICC Regulations require that claims for damaged merchandise must be made with the carrier within fifteen (15) days of the reception date. **Do not** accept damaged merchandise unless such damage is noted on the delivery receipt at the time of reception. Upon prompt notification, Technimount will file a freight claim with the appropriate carrier for damages incurred. Claims are limited in amount to the actual replacement cost. If the claim has not been received by Technimount within the fifteen (15) day period following the date of delivery, or the damage was not noted on the delivery receipt at the time of receipt, the customer will be responsible for the full payment of the original invoice.

Claims for any short or broken merchandise must be made within thirty (30) days of invoicing. For details, refer to the claim process or contact Customer Service at customerservice@technimount.com.

1.4.2. Return Policy

Technimount products may be returned up to sixty (60) days from the reception date, if:

- The received product does not match what was originally ordered.
- The product does not meet the Technimount technical sheet specifications.
- The product is not compatible with the system on which it was intended to be installed on.

To return a Technimount product,

- A Return of Merchandise Authorized (RMA) must be requested and approved by Technimount prior to returning the product.
- Products must be returned undamaged and in its original packaging, appropriately identified with the approved RMA number. Returns will not be approved on a modified or damaged item.
- Charges may apply if the package received is damaged or items are missing.
- Purchaser is responsible for a restocking fee (refer to Table 1 on page 8).

© 2025 Technimount E.M.S. Holding Inc.

Table 1: Restocking fees

RESTOCKING FEES	
Prior to thirty (30) days	10%
Prior to forty-five (45) days	25%
Prior to sixty (60) days	30%

For any manufacturing defect, refer to the conditions within the warranty policy or contact Customer Service at customerservice@technimount.com for additional information.

1.4.3. Return of Material Authorization (RMA)

The Technimount Customer Service department is responsible for all merchandise returns and will provide a Return of Merchandise Authorization (RMA) number, upon approval. The RMA must be printed and placed on the returned merchandise. Technimount reserves the right to charge shipping and restocking fees (refer to Table 1) for the returned items. Special, modified, or discontinued items are not subject to returns.

1.4.4. Claim Process

Upon reception of the returned merchandise, a thorough inspection will be performed. If the merchandise is compliant with the return policy or it is found that the product is defective, Technimount will take corrective actions and close the claim. If, however, it is found that the product is not defective, but rather misused or abused, the product will not be covered by the warranty. Details of our findings and conclusions will be provided shortly thereafter. To submit a claim, contact Customer Service at customerservice@technimount.com to obtain a Return of Material Authorization (RMA) form and return instructions.

© 2025 Technimount E.M.S. Holding Inc.

2. General Safety Guidelines

Always read and abide by all the safety guidelines identified within this document. Pictograms, safety symbols and labels are used to alert the user to a potentially hazardous situation, which, if not avoided, may endanger the patients or EMS and clinical personnel, and/or damage to the product. This includes the special care necessary for the safe and effective use of the Technimount product to avoid damage that may occur from use or misuse. The terms "Warning" and "Caution" herein carry special meaning and should be carefully reviewed.

WARNING – Indicates a hazardous situation that, if not avoided, could result in death or serious injury, and/or damage the product.

CAUTION – Indicates a hazardous situation that, if not avoided, could result in minor or moderate injury, and/or damage the product.

2.1. Symbols and Definitions

WARNING – Risk of Injury

Indicates when a misuse of the Technimount product could result in injuries to the patients or EMS and clinical personnel, and/or damage to the product.

CAUTION – Safe Practice

Alerts the reader to pay special attention to the recommendations and methods outlining how to safely operate the product to minimize risks to the patients, EMS and clinical personnel, and/or to the product.

CAUTION – Safe Handling and Operation

Alerts the reader to pay special attention to the recommendations for safe use of the product, and of potentially hazardous situations that could result in minor injuries to the patients or EMS and clinical personnel. This includes the special care necessary for the safe and effective use of the product to avoid damage that may occur from use or misuse.

CAUTION – Safe Working Load (SWL)/Load Balance

Indicates the total maximum charge for a safe use of the product.

CAUTION – Follow Instructions for Use

Call for action. Reminds the reader to consult the user manual for information.

© 2025 Technimount E.M.S. Holding Inc.

2.2. Labels

Labelling on the surface of the Technimount product, quickly identify potential risks and provides information to the user. A manufacturing label, including the serial number and safe working load specifications (Figure 1), can be seen on the Technimount product.

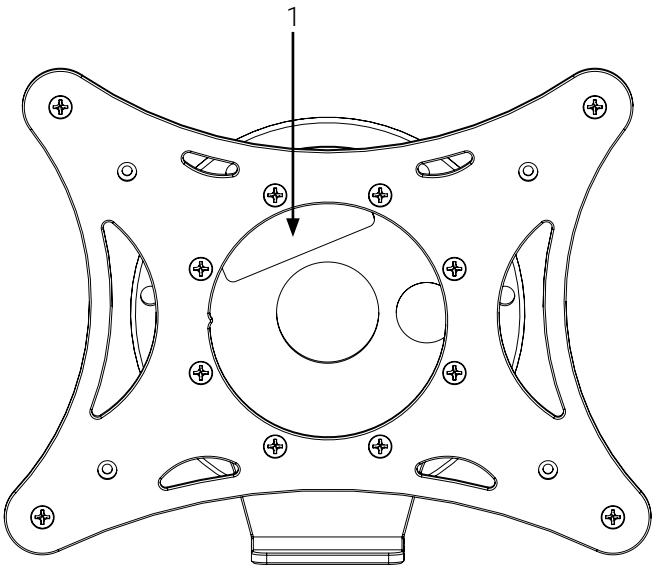

1. Manufacturing label

Figure 1: Location of the manufacturing label (top view)

© 2025 Technimount E.M.S. Holding Inc.

2.3. Safety Measures

Carefully read all the safety measures herein before operating the Technimount product, relay to EMS and clinical personnel during training, and include in your established internal protocols.

More specific safety measures intended for biomedical technicians (or equivalent) relating to the safety checks and conditioned-based maintenance can be found in the « Maintenance » section on page 27.

WARNING – Risk of Injury

- **Do not** use the Bracket Pro Serie 27 – FL if there are any loose or missing screws, to prevent undue risk to the medical device, patients, and EMS and clinical personnel.
- Always use the Bracket Pro Serie 27 – FL as it was intended, using only the compatible medical device, with or without its accessory bags. Improper use of the Technimount product may cause unpredictable functioning resulting injury to the patients or EMS and clinical personnel. Refer to the « Technical Specifications » section on page 12 for compatibilities.
- If any serious incident occurs with the Bracket Pro Serie 27 – FL, immediately stop using the product, report the incident to Technical Support at technicalsupport@technimount.com and the applicable regulatory agency.

CAUTION – Safe Practice

- Always pay close attention to the condition of the Bracket Pro Serie 27 – FL, to avoid risks of damage, equipment falling, or prevent injuries to the patients or EMS and clinical personnel. Follow the recommended maintenance plan and its guidelines, as described in this user manual.
- Practice safely operating the Bracket Pro Serie 27 – FL until the manipulations have been perfected, before use with patients. Improper use of a Technimount product may damage it or cause injury to the patients or EMS and clinical personnel.
- Regulations and standards for safety are the sole responsibility of the end user. Ensure that the installation specifications meet the local and regional compliance requirements before use.
- Refer to your established internal protocols and the user documentation provided with each specific medical device for the safety guidelines and safe use.

CAUTION – Safe Handling and Operation

- Always ensure that the medical device is secured on the Bracket Pro Serie 27 – FL before it is moved to avoid risks of damage, equipment falling, or injuries to the patients or EMS and clinical personnel.
- Always pay close attention **not to** wedge the power cords or tubing during the installation/removal of the Bracket Pro Serie 27 – FL on the mounting system. Refer to your established internal protocols for the safety guidelines and safe use with the Bracket Pro Serie 27 – FL.

CAUTION – Safe Working Load (SWL)/Load Balance

- **Do not** overload the Bracket Pro Serie 27 – FL to avoid tipping incidents or risks of collapsing. The total Safe Working Load (SWL) is 9.98 kg (22 lb).
- **Do not** overload the accessory bags to avoid tipping incidents or risks of collapsing. The total maximum weight for the two (2) bags is 2.27 kg (5 lb).

CAUTION – Follow the Instruction for Use

Always read and abide by the safety guidelines identified and follow the instructions provided in the user documentation of the Bracket Pro Serie 27 – FL and ZOLL Zenix monitor/defibrillator, as well as in your established internal protocols.

© 2025 Technimount E.M.S. Holding Inc.

3. Technical Specifications

Product Name	Bracket Pro Serie 27 – FL
Description	Mounting bracket designed to secure and move a ZOLL Zenix monitor/ defibrillator, with or without its accessory bags
Product Code	160-10-ZZ-FL
Operating Environment	EMS/CCT (air)
Compliance	- Tested in compliance with 14 CFR 23.561 - Tested in compliance with 14 CFR 25.561 - Tested in compliance with 14 CFR 27.561 - Tested in compliance with 14 CFR 29.561
Expected Service Life	5 years
Compatible Stretcher	N/A
Compatible Mounting System	- Standard Surface Base - Extended Surface Base - Universal Mounting Base - Safety Arm System
Compatible Medical Devices/ Accessories	ZOLL Zenix monitor/defibrillator with or without accessories bags
Dimensions (W X D X H)	Bracket Pro Serie 27 – FL: 254.25 mm X 211.58 mm X 72.39 mm (10.01 in. X 8.33 in. X 2.85 in.) - With the medical device: 298.45 mm X 222.25 mm X 273.05 mm (11.75 in. X 8.75 in. X 10.75 in.) - With the medical device and (2) small accessories bags: 448.31 mm X 251.97 mm X 323.85 mm (17.65 in. X 9.92 in. X 12.75 in.) - With the medical device and (2) large accessories bags: 660.4 mm X 262.89 mm X 323.85 mm (26 in. X 10.35 in. X 12.75 in.)
Weight	0.98 kg (2.16 lb)
Composition	Aluminum and plastic
Total Safe Working Load (SWL)	9.98 kg (22 lb)
Operating Temperature	- 35° C to 45° C (- 31° F to 113° F)
Tested and Approved Cleaning Solutions	- Oxivir, 5% Hydrogen Peroxide with Peracetic Acid (AHP) - Lavo 12, 10 000 ppm Sodium Hypochlorite - TNT-100, 5% Quaternary Ammonium Compound - Spectro-Sept, 5% Ethyl Alcohol - Spectrol, 5% EDTA salt
Options	N/A

© 2025 Technimount E.M.S. Holding Inc.

4. Bracket Pro Serie 27 – FL Orientation Diagrams

NOTE : The orientations referenced herein are from the Bracket Pro Serie 27 – FL standpoint.

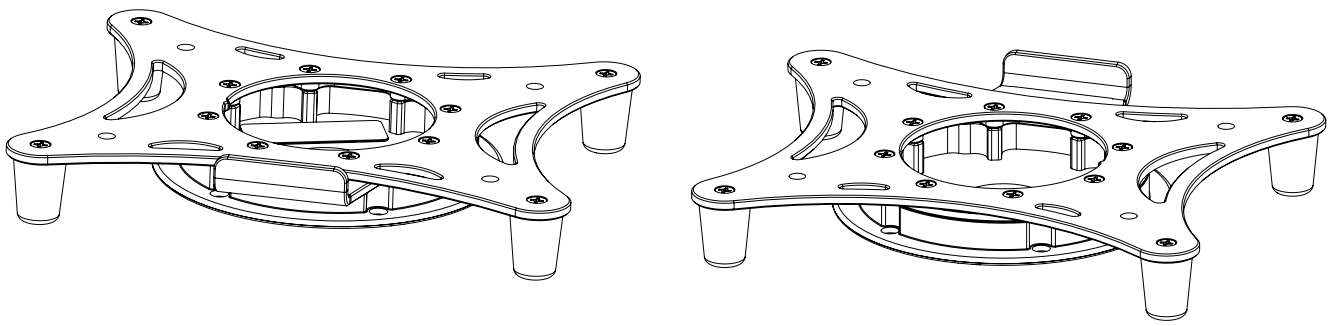

Front of the mounting bracket

Back of the mounting bracket

Figure 2: Orientation diagram of the Bracket Pro Serie 27 – FL

© 2025 Technimount E.M.S. Holding Inc.

5. Bracket Pro Serie 27 – FL Illustrated Parts

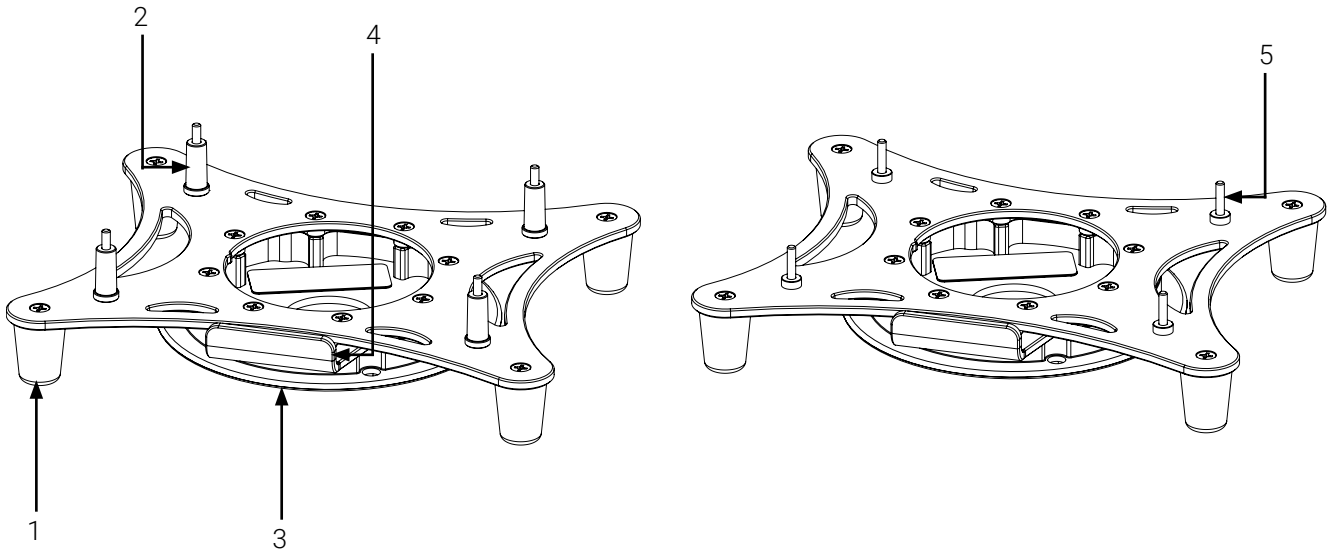

1. Foot (4X)	4. Handle
2. Long stud and screw installations with accessory bags (4X)	5. Short stud and screw for installations without accessory bags (4X)
3. Standard bottom disc	

Figure 3: Components of the Bracket Pro Serie 27 – FL

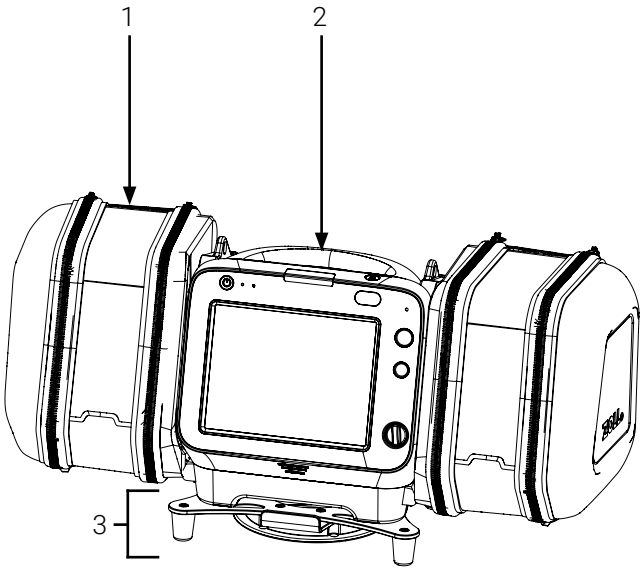

1. Accessory bags (large bags illustrated)	3. Bracket Pro Serie 27 – FL
2. ZOLL Zenix monitor/defibrillator	

Figure 4: Illustration of the medical device installed on the Bracket Pro Serie 27 – FL

© 2025 Technimount E.M.S. Holding Inc.

6. Bracket Pro Serie 27 – FL Illustrated Specifications

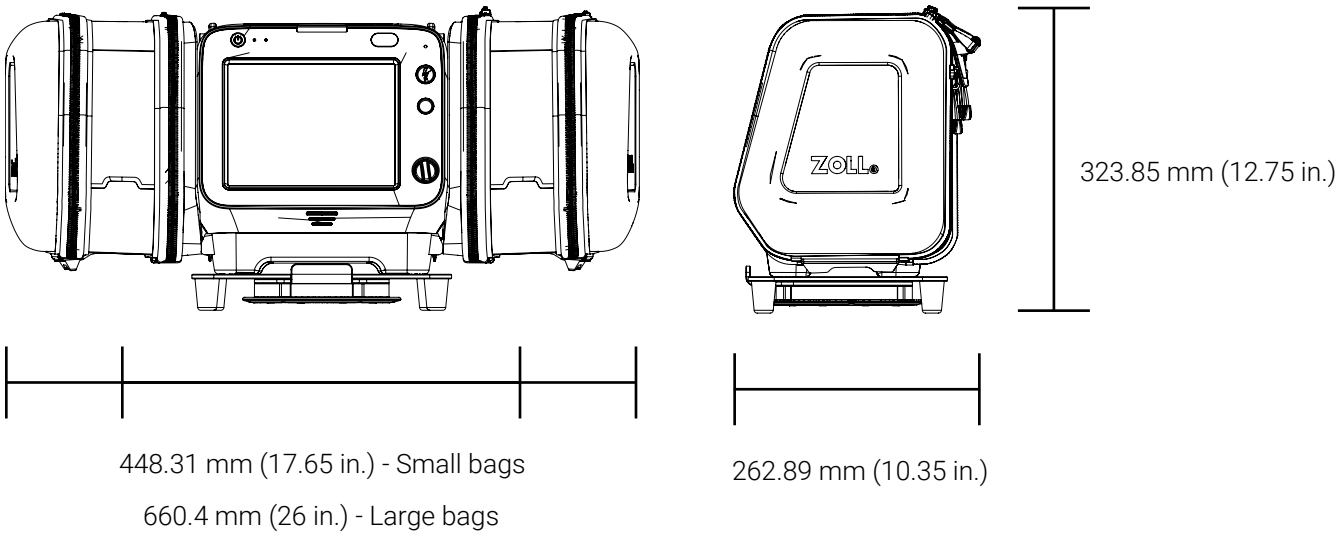

Figure 5: Illustrated specifications with the accessory bags

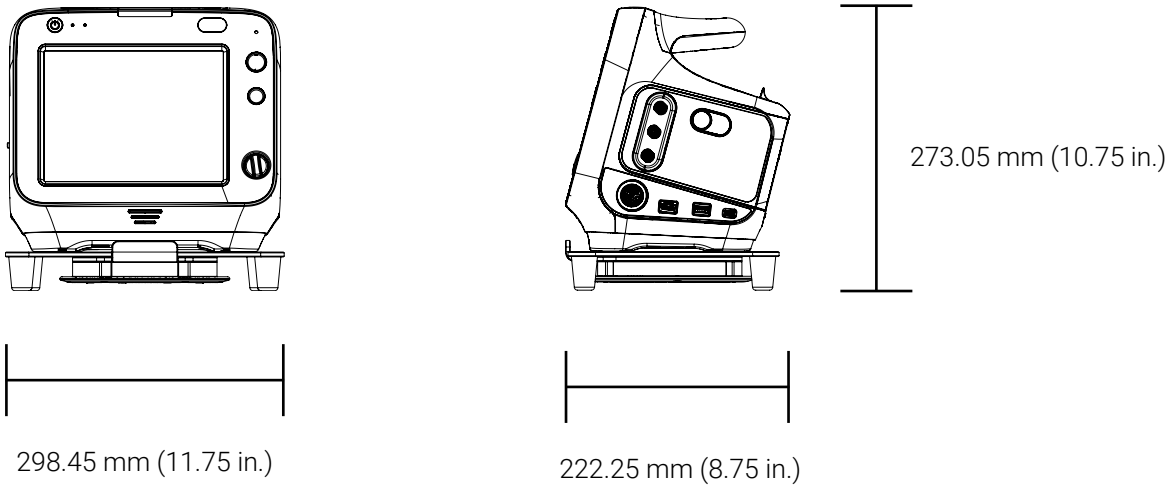

Figure 6: Illustrated specifications without the accessory bags

7. Operate the Bracket Pro Serie 27 – FL

The content in this section is intended for EMS and clinical personnel who are proficient, have received the required training and passed the skills assessment, therefore sufficiently knowledgeable to safely operate the Bracket Pro Serie 27 – FL.

7.1. Install the Bracket Pro Serie 27 – FL on the Mounting System

1. Align and insert the standard bottom disc located under the Bracket Pro Serie 27 – FL on the mounting system horizontally until it locks (Figure 7), paying close attention not to wedge the power cords or tubing.

(A) (B)

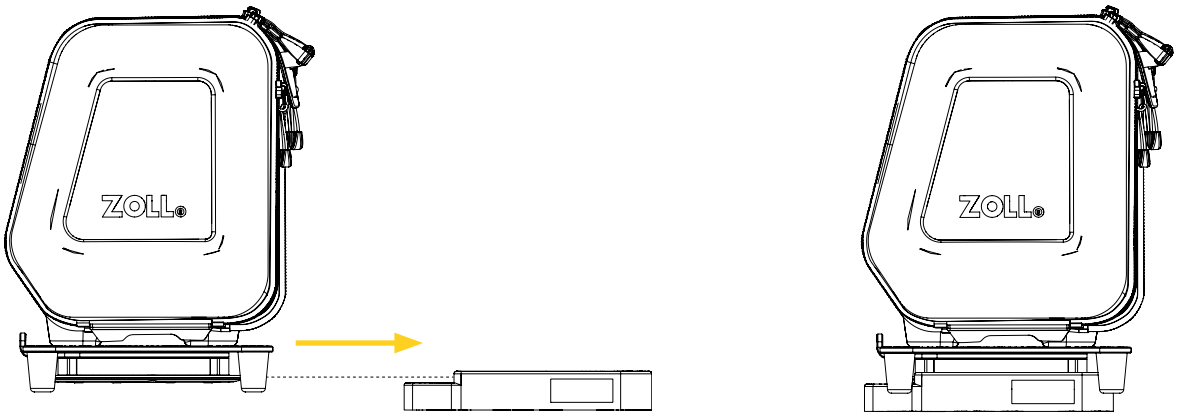

Figure 7: Installing the Bracket Pro Serie 27 – FL on the mounting system

2. Move the bracket back and forth a few times to ensure it is locked and secured on the mounting system. If the bracket stays in the mounting system after the verification, it is locked and secured.
3. Turn the bracket up to 360° clockwise or counterclockwise to the desired position (Figure 8).

(A) (B) (C)

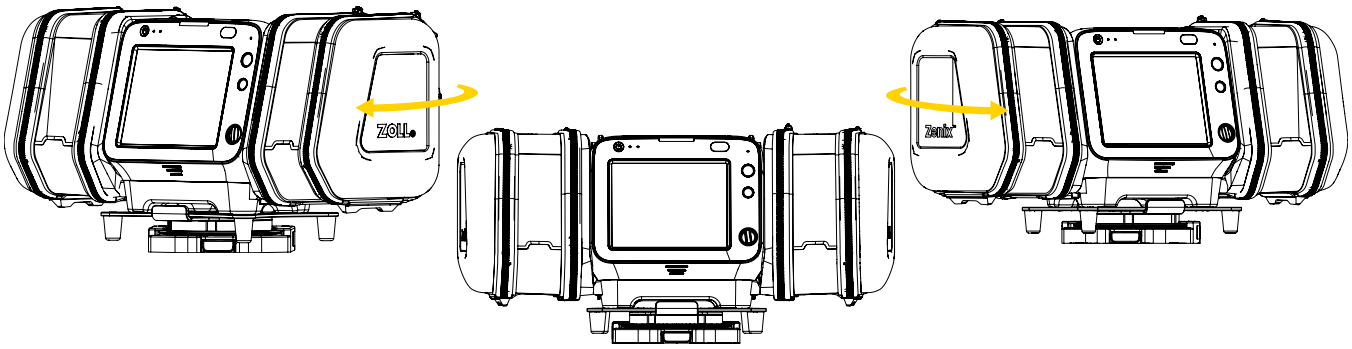

Figure 8: Rotating the Bracket Pro Serie 27 – FL

The installation of the Bracket Pro Serie 27 – FL on the mounting system is complete.

© 2025 Technimount E.M.S. Holding Inc.

7.2. Remove the Bracket Pro Serie 27 – FL from the Mounting System

1. Press and hold the quick release button of the mounting system (Figure 9 A), then slide the disc of the Bracket Pro Serie 27 – FL out of the mounting system horizontally (Figure 9 B), while paying close attention not to wedge the power cords or tubing.

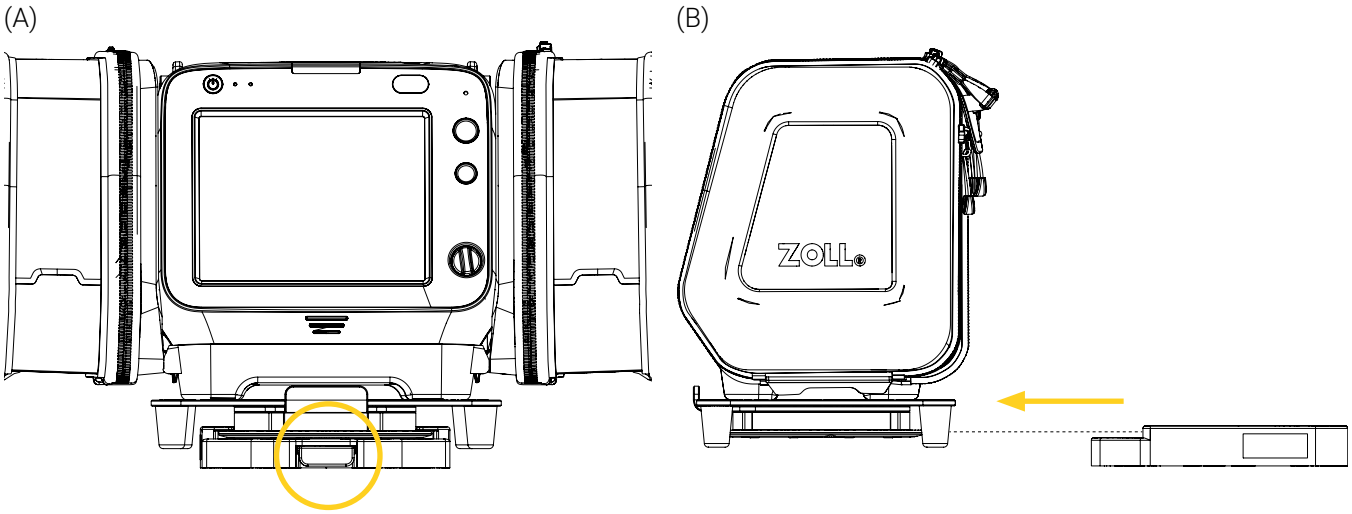

Figure 9: Removing the Bracket Pro Serie 27 – FL from the mounting system

2. Set the bracket aside, or place it in its dedicated storage space. Refer to your established internal protocols if needed.

The removal of the Bracket Pro Serie 27 – FL from the mounting system is complete.

© 2025 Technimount E.M.S. Holding Inc.

Annex I Skills Assessment of the EMS and clinical personnel

Following training, a skills assessment should be given to each member of the EMS and clinical personnel to ensure they have fully comprehended the labelling, warnings and cautions, potential risks, safe practices and proper operating procedures needed to safely and effectively use the Bracket Pro Serie 27 – FL. Consider adding the following to your internal training protocols.

Trainee name: Unit:

Assessor name: Date:

SKILLS ASSESSMENT		
SKILL CRITERIA	PASSED	FAILED
Labelling		
- Able to identify meaning and potential risks associated with the different safety labels:		
- Safe Working Load (SWL)	☐	☐
Safety Measures		
- Knows **not to** use the Bracket Pro Serie 27 – FL if there are any loose or missing screws, to prevent undue risk to the medical device, patients, and EMS and clinical personnel.	☐	☐
- Knows to always use the Bracket Pro Serie 27 – FL as it was intended, using only the compatible medical device, with or without its accessory bags, and that improper use of the Technimount product may cause unpredictable functioning.	☐	☐
- Knows to always pay close attention to the condition of the Bracket Pro Serie 27 – FL.	☐	☐
- Knows to always ensure that the medical device is secured on the Bracket Pro Serie 27 – FL before it is moved.	☐	☐
- Knows to always pay close attention **not to** wedge the power cords or tubing during the installation/removal of the Bracket Pro Serie 27 – FL on the mounting system.	☐	☐
- Knows **not to** overload the Bracket Pro Serie 27 – FL.	☐	☐
- Knows **not to** overload the accessory bags.	☐	☐
- Knows to always read and abide by the safety guidelines identified and follow the instructions provided in the user documentation of the Bracket Pro Serie 27 – FL and ZOLL Zenix monitor/defibrillator, as well as in their established internal protocols.	☐	☐
Operation		
- Able to install/remove the Bracket Pro Serie 27 – FL on/from the mounting system.	☐	☐
- Able to rotate the Bracket Pro Serie 27 – FL.	☐	☐

© 2025 Technimount E.M.S. Holding Inc.

SKILLS ASSESSMENT

SKILL CRITERIA	PASSED	FAILED
- Has practiced safely operating the Bracket Pro Serie 27 – FL, has perfected the manipulations and has acquired the required skill level to safely use with patient.	☐	☐

© 2025 Technimount E.M.S. Holding Inc.

Annex II Unpack the Bracket Pro Serie 27 – FL

Unpacking should be reserved for biomedical technicians (or equivalent) who have extensive mechanical experience, and advanced skill level.

1. Inspect the shipping box(es) for signs of damage before accepting shipment. Take pictures and report them promptly if applicable.
2. Move the shipping box(es) to the location of the installation.
3. Open the shipping box(es).
4. Unpack the box(es) and ensure that all shipping and packaging materials have been properly removed, prior to installation.

   NOTE : Keep all packaging material for future use.

5. Identify the items included in the shipping box(es) for the installation, then set them aside. Refer to the « Install the ZOLL Zenix on the Bracket Pro Serie 27 – FL » section on page 23 for the required parts.
6. Inspect the items for signs of damage. Take pictures and report them promptly if applicable.

© 2025 Technimount E.M.S. Holding Inc.

Annex III Install the ZOLL Zenix on the Bracket Pro Serie 27 – FL

The content in this section is intended for biomedical technicians (or equivalent) who have extensive mechanical experience, and advanced skill level and have read the entire « Safety Measures » section on page 11.

Required Installation Time

5 minutes

NOTE : This estimation will vary depending on the biomedical's (or equivalent) proficiency, knowledgeabilty, as well as your product configuration. Subsequent installations and adjustments of the mounting solution should take sensibly the same time, or shorter.

Required Tools

- 3 mm hex key
- Torque wrench
- Phillips screwdriver #2
- Medium strength thread lock adhesive ( )

Install the Medical Device on the Mounting Bracket

1. Identify the Bracket Pro Serie 27 – FL assembly parts (Figure 10).

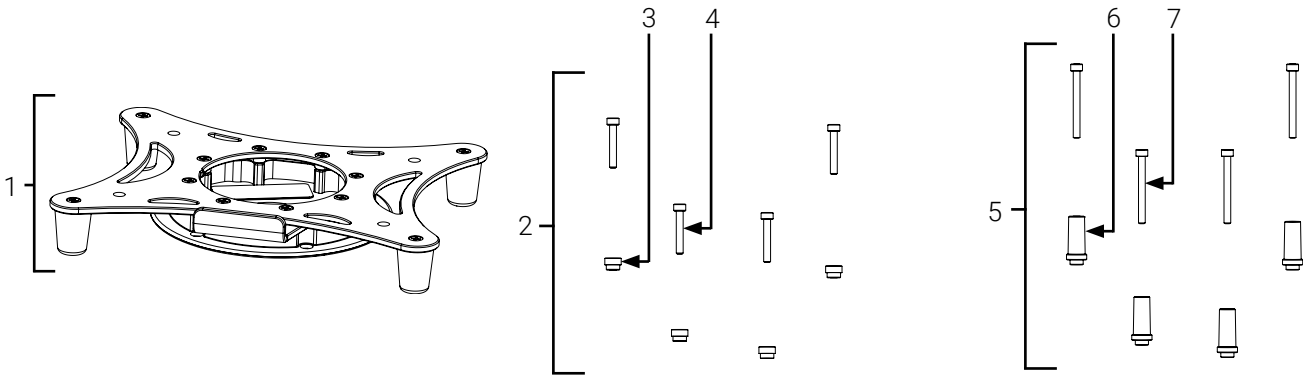

1. Bracket Pro Serie 27 – FL
2. Hardware kit for an installation without accessory bags
3. 6.858 mm X 9.652 mm (0.27 in. X 0.38 in.) stud (4X)
4. M4-0.7 mm × 25 mm screws (4X)
5. Hardware kit for an installation with accessory bags
6. 25.91 mm X 11.94 mm (1.02 in. X 0.47 in.) stud (4X)
7. M4-0.7 mm × 40 mm screws (4X)

Figure 10: Bracket Pro Serie 27 – FL assembly parts

© 2025 Technimount E.M.S. Holding Inc.

2. Flip the medical device upside down to access the screws and facilitate the mounting bracket installation (Figure 11).
3. Unscrew and remove the four (4) screws using a Phillips screwdriver #2 (Figure 11). The screws will not be reused for this installation.

(A) (B)

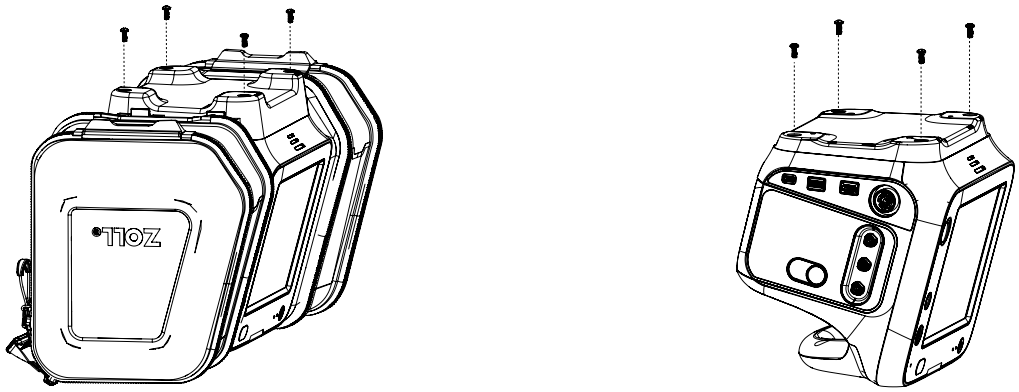

Figure 11: Removing the screws

4. Insert the studs that apply to your configuration needs in the screw holes:
   - For an installation of the medical device using the accessory bags, insert the 25.91 mm X 11.94 mm (1.02 in. X 0.47 in.) studs (Figure 12 A).
   - For an installation of the medical device without the use of the accessory bags, insert the 6.858 mm X 9.652 mm (0.27 in. X 0.38 in.) studs (Figure 12 B).

(A) (B)

Figure 12: Installing the studs

© 2025 Technimount E.M.S. Holding Inc.

5. Place the mounting bracket over the studs with the standard surface disc pointing upwards and handle facing the front of the medical device, then tighten using a 3 mm hex key and a torque wrench (Figure 13 and Figure 14).

   NOTE : A torque of 38.4 in.-lb is required.

   - For an installation of the medical device using the accessory bags, tighten four (4) M4-0.7 mm × 40 mm screws coated with medium strength thread lock adhesive (Figure 13).
   - For an installation of the medical device without the use of the accessory bags, tighten four (4) M4-0.7 mm × 25 mm screws coated with medium strength thread lock adhesive (Figure 14).

(A) (B)

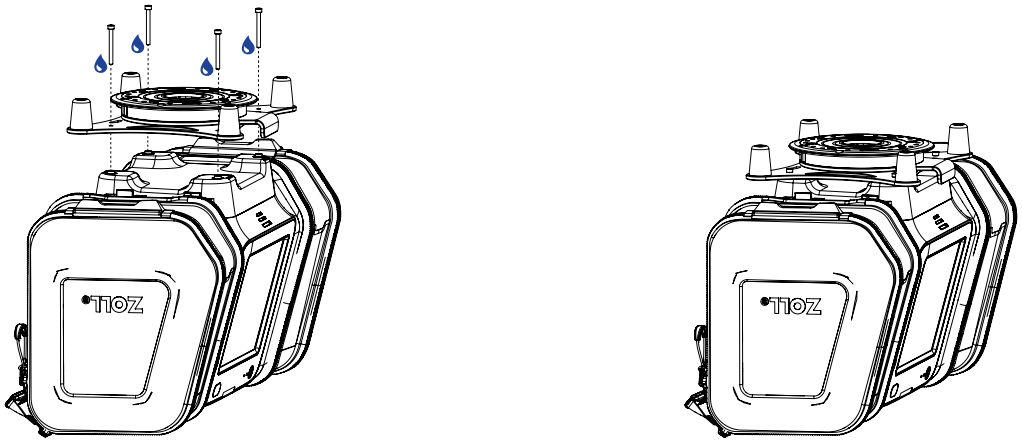

Figure 13: Installing the medical device on the Bracket Pro Serie 27 – FL when used with the accessory bags

(A) (B)

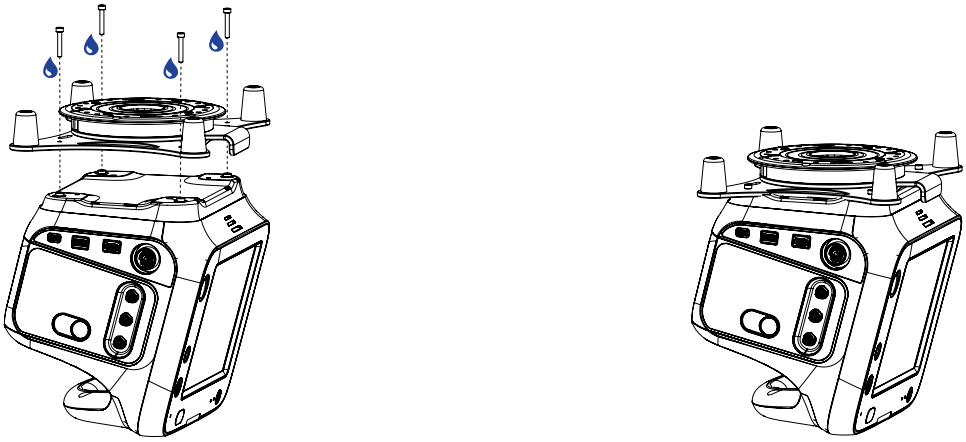

Figure 14: Installing the medical device on the Bracket Pro Serie 27 – FL when used without the accessory bags

© 2025 Technimount E.M.S. Holding Inc.

6. Move the Bracket Pro Serie 27 – FL from side to side and back and forth a few times to ensure that it is properly secured on the medical device. If the mounting bracket does not move after the verification, it is properly secured.
7. Flip the medical device upright (Figure 15 A and Figure 15 B). Refer to the user documentation of the medical device if needed.

(A) (B)

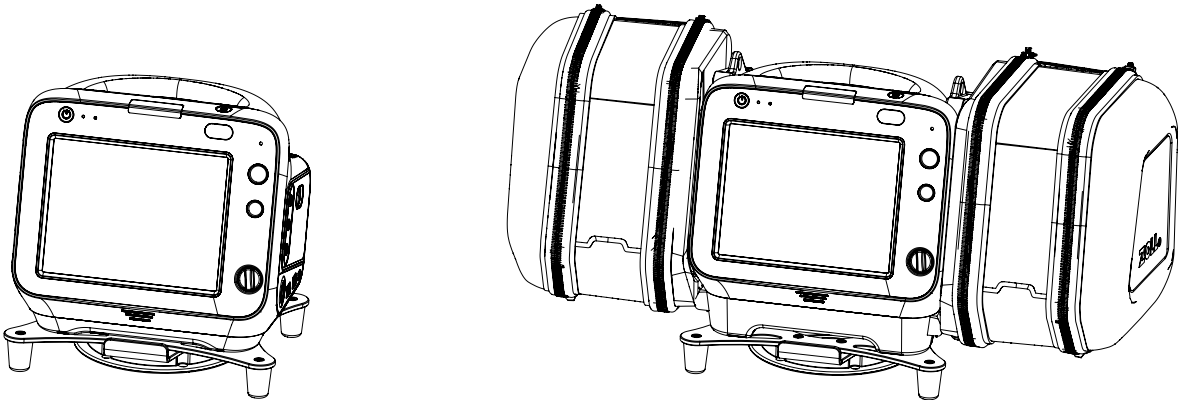

Figure 15: ZOLL Zenix monitor/defibrillator installed on the Bracket Pro Serie 27 – FL

The installation of the medical device on the mounting bracket is complete.

© 2025 Technimount E.M.S. Holding Inc.

Annex IV Maintenance

Safety checks and condition-based maintenance should be carried out by biomedical technicians (or equivalent) who have extensive mechanical experience, and advanced skill level and have read the entire « Safety Measures » section on page 11, and the maintenance specific safety measures listed below.

Factors such as weather, environment, geographical location and individual usage will necessitate different needs. For the maintenance of the Bracket Pro Serie 27 – FL, follow the guidelines listed herein and in accordance with your service's current maintenance practices and established internal protocols. Please contact Technical Support at techsupport@technimount.com for replacement parts or repair related issues, if needed.

WARNING – General Warning

- **Do not** perform safety checks or condition-based maintenance before having read the entire content of the user manual, gained in-depth knowledge and product comprehension, and familiarized yourself with the standards and guidelines.
- Safety checks and a condition-based maintenance plan are required and should be established for all Technimount products.
- Perform the safety checks and maintenance operations as described herein. Failing to follow the recommended maintenance plan or its guidelines could cause premature damage to the product.
- Use only Technimount parts, maintenance procedures, cleaning solutions and lubricants (if applicable), as described herein. Using unapproved modified parts or procedures for the maintenance of the Technimount product may cause the system to be unstable and could cause injury to the patients or EMS and clinical personnel and void the product warranty.
- Replace damaged or worn-out parts if past their expected service life or when damaged (refer to the « Replacement Parts/Kits » section on page 33). Recycle damaged parts or dispose according to the environmental laws that apply to your jurisdiction and consult the Safety Data Sheets (SDS).

CAUTION – Safe Handling and Operation

- **Do not** use unauthorized, untested or unapproved cleaning products and disinfectants to perform condition-based maintenance, to avoid damaging the surface of your Technimount product and void the warranty. Technimount will not be held liable for damages resulting from the use of an unauthorized, untested or unapproved cleaning product.
- **Do not** use powered tools to screw the hardware during installation, as there is a potential risk of damage to the threads.
- **Do not** steam clean or use ultrasonic cleaners on the system or any of its components.
- **Do not** immerse the metal parts/components in water.
- To spot clean, the maximum water temperature should not exceed 82° C (180° F). The maximum water pressure should not exceed 1500 psi/103.5 BAR. If using a high pressure washer, the pressure nozzle must be kept a minimum of 609.6 mm (24 in.) from the product.
- When cleaning, always use the appropriate Personal Protection Equipment (PPE) based on your established internal protocols (e.g., gloves, eyewear, etc.).

© 2025 Technimount E.M.S. Holding Inc.

CAUTION – Corrosion

- Always rinse and dry the Bracket Pro Serie 27 – FL components properly after using cleaning products. Certain types of cleaners may leave a corrosive residue on the surface of the product and could cause the premature corrosion of critical components. Refer to the product Safety Data Sheets (SDS) for chemical information or handling, storage and emergency measures in case of accident.
- Dispose of corrosive wastes according to the environmental laws that apply to your jurisdiction and consult the Safety Data Sheets (SDS).

CAUTION – Follow Instructions for Use

Always read and abide by all the safety guidelines identified, as well as follow all of the instructions provided by the manufacturer of the cleaning product.

Maintenance Frequency

- Safety checks and the condition-based maintenance should be performed minimally every month or as frequently needed, to prolong the longevity of the Bracket Pro Serie 27 – FL in optimal conditions.
- Decontaminate the Bracket Pro Serie 27 – FL as recommended in your established internal protocols, as well as the regulations and standards in virtue of the infection prevention and control procedures.

Required Tools

- Clean and dry cloth
- Soft brush
- Pressure washer
- Cleaning solutions
- 3 mm hex key
- Torque wrench
- Phillips screwdriver #2
- Medium strength thread lock adhesive ( )

Tested and Approved Cleaning Solutions

- Oxivir, 5% Hydrogen Peroxide with Peracetic Acid (AHP)
- Lavo 12, 10 000 ppm Sodium Hypochlorite
- TNT-100, 5% Quaternary Ammonium Compound
- Spectro-Sept, 5% Ethyl Alcohol
- Spectrol, 5% EDTA salt

© 2025 Technimount E.M.S. Holding Inc.

Maintenance Plan

NOTE : In case of a non-conformity, stop using the product and contact Technical Support at techsupport@technimount.com immediately for a remedial action plan.

NOTE : Always keep records of your maintenance activities and immediately remove defective or expired products from your inventory.

SAFETY CHECKS	CHECKED
Bracket Pro Serie 27 – FL (Figure 16)	
- Visually inspect all the components of the Bracket Pro Serie 27 – FL to ensure that the hardware is in good condition and there are no loose screws. • *If the hardware is not in good condition, replace it. Contact Technical Support if needed.* • *If the screws are loose, refer to « Install the ZOLL Zenix on the Bracket Pro Serie 27 – FL » section on page 23.*	☐
- Visually inspect all the components of the Bracket Pro Serie 27 – FL to ensure there is no damage or chemical attack. • *If there are traces of chemical attack, refer to the « Condition-Based Maintenance » section on page 29.*	☐
- Install the Bracket Pro Serie 27 – FL in the Standard Surface Base and remove it a few times to ensure proper functioning of the safety mechanism of the mounting system. • *If the standard bottom disc located under the bracket of the medical device does not easily insert in the base and does not lock, and/or cannot be easily removed when using the quick release button of the base, there is a non-conformity.*	☐
- Move the medical device from side to side and back and forth a few times to ensure it is secured on the Bracket Pro Serie 27 – FL and does not move. • If the medical device moves, refer to « Install the ZOLL Zenix on the Bracket Pro Serie 27 – FL » section on page 23.	☐

CONDITION-BASED MAINTENANCE	CHECKED
Clean the Bracket Pro Serie 27 – FL, after you have completed the safety checks:	☐

1. Remove the excess dirt using a clean cloth, if needed.
2. Remove the contaminants using a pressure washer or as recommended in your established internal protocols and control procedures.
3. Clean using a cloth and cleaning solution.
4. Spot clean stains by applying the solution directly on the stain and let sit on the surface, if needed.

   NOTE : Avoid over saturation and ensure that the product does not sit on the surface of the Bracket Pro Serie 27 – FL components longer than recommended by the cleaner's manufacturer.

5. Thoroughly rinse the solution with a clean cloth dampened with lukewarm water, then dry all the components using a clean cloth before returning to service.

© 2025 Technimount E.M.S. Holding Inc.

MAINTENANCE LOG

Comments and observations following the Safety Checks and Condition-Based Maintenance:

Maintenance plan completed on (dd/mm/yyyy):

Maintenance plan completed by:

© 2025 Technimount E.M.S. Holding Inc.

Illustrated Inspection Points

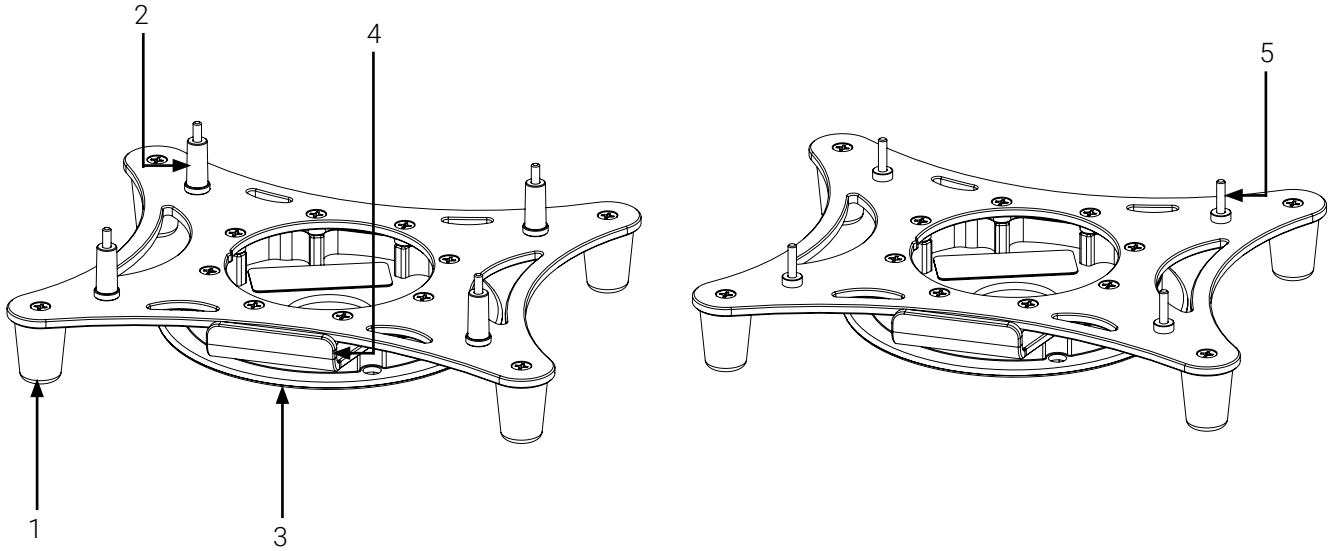

1. Foot (4X)
2. Long stud and screw installations with accessory bags (4X)
3. Standard bottom disc
4. Handle
5. Short stud and screw for installations without accessory bags (4X)

Figure 16: Illustrated inspection points

© 2025 Technimount E.M.S. Holding Inc.

Annex V Replacement Parts/Kits

Technimount reserves the right to change part numbers and products without notice. Please contact Customer Service at customerservice@technimount.com to ensure product options and availability, or Technical Support at techsupport@technimount.com for replacement parts/kits or repair related issues.

REFERENCE # (FIGURE 16)	PART/KIT #	PART/KIT DESCRIPTION
2 and 5	919-00-ZZ-FL	Hardware replacement kit
1	923-00-1282-INS	Replacement foot

© 2025 Technimount E.M.S. Holding Inc.

TECHNIMOUNT
EMS®

SAFETY AND FLEXIBILITY WHERE IT MATTERS MOST

© 2025 Technimount E.M.S. Holding Inc. | technimount.com