TECHNIMOUNT
EMS®

Q-PROTRAK® – FL

USER MANUAL



AIRPLANES/ROTOCRAFTS FAA 14 CFR TECHNIMOUNT ENGINEERING

SAFETY AND FLEXIBILITY
WHERE IT MATTERS MOST

Copyrights

Copyright 2026 Technimount E.M.S. Holding Inc. is an affiliated company of Technologies CGC Inc. All Rights Reserved. No part of this publication may be reproduced, transmitted, transcribed, backed-up on a retrieval system, translated in any language, modified in any form or by any means, without the written permission of Technimount or its affiliate companies.

Trademarks

Product and medical device manufacturer names are Trademarks™ or Registered Trademarks® of their respective holders.

- Technimount EMS®, Q-Protrak® and Bracket Pro Serie® are registered trademarks of Technologies CGC Inc.
- Oxivir® is a registered trademark of Diversey.
- Lavo® is a registered trademark of KIK Holdco Company, Inc.

For any issues with your Technimount product, its components, or for any technical questions during the installation, operation, or maintenance, please contact Technical Support at techsupport@technimount.com.

Contact Information

Technimount E.M.S. Holding Inc.

C/O: Regulatory Affairs

3770 Jean Marchand Street, Suite 100-C

Quebec (Quebec) G2C 1Y6

Canada

customerservice@technimount.com

techsupport@technimount.com

legal@technimount.com

www.technimount.com

T + 1 581 700-6613

SF + 1 888 639-2758 (North America)

Table of Contents

Copyrights ..... **ii**
Trademarks ..... **ii**
Contact Information ..... **ii**
1. General Mentions and Considerations **5**
1.1. Intended Use 5
1.2. User Competency 5
1.3. Warranties 6
1.3.1. Warranty Policy 6
1.3.2. Limited Warranty 6
1.3.3. International Warranty Clause 7
1.3.4. User Liability 7
1.4. Claims 7
1.4.1. Damaged or Defective Merchandise 7
1.4.2. Return Policy 7
1.4.3. Return Material Authorization (RMA) 8
1.4.4. Claim Process 8
2. General Safety Guidelines **9**
2.1. Symbols and Definitions 9
2.2. Labels 10
2.2.1. Manufacturing Label 10
2.2.2. Operation Label 11
2.3. Safety Measures 12
3. Technical Specifications **15**
4. Orientation Illustrations **16**
5. Illustrated Parts **17**
6. Illustrated Dimensions **19**
7. Safety Mechanisms **20**
7.1. Activate the Safety Mechanism of the Mounting System 21
7.2. Deactivate the Safety Mechanism of the Mounting System 21
7.3. Activate the Safety Mechanism of the Micro Base 22
7.4. Deactivate the Safety Mechanism of the Micro Base 22
8. Operate the Q-Protrak **23**

© 2026 Technimount E.M.S. Holding Inc.

..... 8.1. Installing the Q-Protrak on the Load-Bearing Tracks 23
..... 8.2. Removing the Q-Protrak from Load-Bearing Tracks 24
..... 8.3. Installing the Medical Device on the Q-Protrak 25
..... 8.4. Removing the Medical Device from the Q-Protrak 27
Annex I Skills Assessment of the EMS and Clinical Personnel 28
Annex II Unpack the Q-Protrak 30
Annex III Install the Load-Bearing Tracks 31
..... Estimated Installation Time 31
..... Customer-Provided Tools and Parts 31
..... Installation Procedure 32
Annex IV Maintenance 34
..... Maintenance Frequency 35
..... Customer-Provided Tools 35
..... Tested and Approved Cleaning Solutions 35
..... Maintenance Plan 36
..... Safety Checks 36
..... Condition-Based Maintenance 38
..... Maintenance Log 39
..... Illustrated Inspection Points 40
Annex V Replacement Parts/Kits 41
Annex VI Micro Base Replacement Procedure 42
..... Estimated Replacement Time 42
..... Required Part(s) 42
..... Customer-Provided Tools 42
..... Replacement Procedure 42
Annex VII Load-Bearing Track Replacement Procedure 44
..... Estimated Replacement Time 44
..... Customer-Provided Tools and Parts 44
..... Replacement Procedure 44

© 2026 Technimount E.M.S. Holding Inc.

1. General Mentions and Considerations

This user manual includes product information, standards and guidelines to assist the administrator/manager/supervisor and biomedical technician (or equivalent) with the unpacking, assembling (when indicated), maintenance, training and skills assessment of the EMS and clinical personnel, as well as specific user-related information to safely and effectively operate the Q-Protrak – FL (hereinafter called Q-Protrak).

Please read the user manual thoroughly to fully assess, comprehend, then relay its content to EMS and clinical personnel during training, to warn them of any potential danger of its abuse, how to safely use the product and provide a safe environment for patients as well as themselves. Your established internal protocols should be updated to include the Technimount product(s) standards, guidelines, requirements and safety recommendations included within this documentation. The user manual should remain available to users when needed and relayed if the product is subsequently sold.

NOTE : Technimount continually seeks advancements in product design and quality. While the user manual contains the most updated product information available at the time of printing, it may contain minor differences from the current version, including image references. For more information, please contact Technical Support at techsupport@technimount.com.

NOTE : Technimount reserves the right to change part numbers and products without notice. Please contact Customer Service at customerservice@technimount.com to ensure product options and availability.

1.1. Intended Use

The Q-Protrak is a mounting system designed to aid trained EMS and clinical personnel secure and transport medical devices and accessories on vertical/horizontal load-bearing tracks during air emergency medical services and critical care transport.

1.2. User Competency

To safely operate the Q-Protrak, personnel must have the required skill level to comply with their function and level of interaction with the mounting system. Training should be given to EMS and clinical personnel prior to them using the Q-Protrak. Refer to the « Skills Assessment of the EMS and Clinical Personnel » section on page 28 to evaluate their competency.



Indicates who the content is intended for and the level of competency required. The definitions of the three (3) levels of competency are specified below.

- **Competent (trained EMS and clinical personnel):** Has received the required training, is sufficiently knowledgeable to safely operate the product and has passed the skills assessment (refer to the « Skills Assessment of the EMS and Clinical Personnel » section on page 28).

  NOTE : Any member of the EMS and clinical personnel who has not received the required training and lacks the knowledge needed to safely operate the mounting system must not use the product.

© 2026 Technimount E.M.S. Holding Inc.

- **Proficient (administrator/manager/supervisor):** Has in-depth knowledge and product comprehension, and is familiar with standards and guidelines. Skilled to train the EMS and clinical personnel on how to safely use the product.
- **Advanced (biomedical technician or equivalent):** Has extensive mechanical experience. Skilled to perform the unpacking, assembly, safety checks and condition-based maintenance procedures as detailed herein, or the basic troubleshooting, upgrade and/or replacement procedures if applicable.

1.3. Warranties

1.3.1. Warranty Policy

This statement constitutes Technimount's entire warranty policy with regards to Technimount products. Technimount makes no other warranty or representation, neither expressed nor implied, except as stated herein. There is no warranty of merchantability or warranty of fitness for any particular purpose. Under no circumstances will Technimount be held liable hereunder for incidental or consequential damages, arising from or in any manner, related to sales or use of any such product.

Technimount E.M.S. Holding Inc. guarantees to the original "Purchaser" of the "Product" with which this "Limited warranty" is included, that the product will be free from "Defects" in workmanship and materials under normal use for a "Warranty period" of one (1) year from the product purchase date by the purchaser. During the warranty period, the product will be repaired or replaced according to the "Limited warranty" without charge to the purchaser for parts or labor. The parts and product may be repaired or replaced with new or refurbished parts or products. Herein this Limited Warranty, "Refurbished" means parts and products which have been returned to the factory, specifically. If the product is repaired or replaced within the warranty period, the greater of the remaining warranty period will apply, or three (3) months from the date of repair or replacement. If the product is repaired or replaced after the warranty period has expired, the warranty period for the repair or replacement will expire three (3) months after the repair or replacement date.

1.3.2. Limited Warranty

Technimount products are intended to secure in place medical devices only in the case of a single emergency landing, and must thereafter be immediately replaced. If the end user uses a Technimount product following an emergency landing, it is at the end user's own risk, and Technimount will not be held liable.

The limited warranty does not apply to normal wear that could result from normal use. It does not apply when the product or any of its components have been disassembled or repaired by someone not authorized by "Technimount". It does not cover repair or the replacement of any product or part thereof damaged by neglect, misuse, moisture, liquids, exposure to heat, accidents, abuse, and non-compliance with the instructions for installation and use provided with the product. It does not cover physical damage to the surface of the product. The decision to repair, replace or refuse the coverage is final and at the sole discretion of Technimount, without any compensation or obligation from Technimount. The product, defined as a "mounting system", is specifically designed to secure and transport medical devices and accessories on vertical/horizontal load-bearing tracks during air emergency medical services and critical care transport, and should only be used to fulfill this requirement. Any other use will void the warranty and Technimount shall not be held liable on any claim if the product has been modified or adapted for use.

© 2026 Technimount E.M.S. Holding Inc.

1.3.3. International Warranty Clause

This warranty abides by the Canadian domestic policy. Warranty outside Canada may vary by country. Please contact Customer Service at customerservice@technimount.com for more information.

1.3.4. User Liability

The purchaser and administrator are responsible to validate regulations and standards for safety in their region, to comply with applicable safety regulations. Technimount is not responsible to inform the purchaser or the administrator of any applicable legislation for safety in their area.

The administrator is responsible for providing proper training to any personnel who will install, operate and perform maintenance on Technimount products.

1.4. Claims

1.4.1. Damaged or Defective Merchandise

ICC Regulations require that claims for damaged merchandise must be made with the carrier within fifteen (15) days of the reception date. **Do not accept** damaged merchandise unless such damage is noted on the delivery receipt at the time of reception. Upon prompt notification, Technimount will file a freight claim with the appropriate carrier for damages incurred. Claims are limited in amount to the actual replacement cost. If the claim has not been received by Technimount within the fifteen (15) day period following the date of delivery, or the damage was not noted on the delivery receipt at the time of receipt, the customer will be responsible for the full payment of the original invoice.

Claims for any short or broken merchandise must be made within thirty (30) days of invoicing. For details, refer to the claim process or contact Customer Service at customerservice@technimount.com.

1.4.2. Return Policy

Technimount products may be returned up to sixty (60) days from the reception date, if:

- The received product does not match what was originally ordered.
- The product does not meet the Technimount technical sheet specifications.
- The product is not compatible with the system on which it was intended to be installed on.

To return a Technimount product,

- A Return of Merchandise Authorized (RMA) must be requested and approved by Technimount prior to returning the product.
- Products must be returned undamaged and in its original packaging, appropriately identified with the approved RMA number. Returns will not be approved on a modified or damaged item.
- Charges may apply if the package received is damaged or items are missing.
- Purchaser is responsible for a restocking fee (refer to « Table 1: Restocking fees » on page 8).

© 2026 Technimount E.M.S. Holding Inc.

Table 1: Restocking fees

RESTOCKING FEES	
Prior to thirty (30) days	10%
Prior to forty-five (45) days	25%
Prior to sixty (60) days	30%

For any manufacturing defect, refer to the conditions within the warranty policy or contact Customer Service at customerservice@technimount.com for additional information.

1.4.3. Return Material Authorization (RMA)

The Technimount Customer Service department is responsible for all merchandise returns and will provide a Return Material Authorization (RMA)) number, upon approval. The RMA must be printed and placed on the returned merchandise. Technimount reserves the right to charge shipping and restocking fees (refer to « Table 1: Restocking fees ») for the returned items. Special, modified, or discontinued items are not subject to returns.

1.4.4. Claim Process

Upon reception of the returned merchandise, a thorough inspection will be performed. If the merchandise is compliant with the return policy or it is found that the product is defective, Technimount will take corrective actions and close the claim. If, however, it is found that the product is not defective, but rather misused or abused, the product will not be covered by the warranty. Details of our findings and conclusions will be provided shortly thereafter. To submit a claim, contact Customer Service at customerservice@technimount.com to obtain a Return Material Authorization (RMA) form and return instructions.

© 2026 Technimount E.M.S. Holding Inc.

2. General Safety Guidelines



The content in this section is intended for personnel who have a competent, proficient or advanced level of competency. Refer to the « User Competency » section on page 5 if needed.

Pictograms, safety symbols and labels are used to alert the user to a potentially hazardous situation, which, if not avoided, may endanger the patients or the EMS and clinical personnel, and/or damage the product. This includes the special care necessary for the safe and effective use of the Technimount product to avoid damage that may occur from use or misuse.

The terms "Warning" and "Caution" herein carry special meaning and should be carefully reviewed before reading the « Safety Measures » section on page 12.

WARNING – Indicates a hazardous situation that, if not avoided, could result in death or serious injury, and/or damage the product.

CAUTION – Indicates a hazardous situation that, if not avoided, could result in minor or moderate injury, and/or damage the product.

2.1. Symbols and Definitions



WARNING – Risk of Injury

Indicates when a misuse of the Technimount product could result in injuries to the patients or EMS and clinical personnel, and/or damage to the product.



CAUTION – Safe Practice

Alerts the reader to pay special attention to the recommendations and methods outlining how to safely operate the product to minimize risks to the patients, EMS and clinical personnel, and/or to the product.



CAUTION – Safe Handling and Operation

Alerts the reader to pay special attention to the recommendations for safe use of the product, and of potentially hazardous situations that could result in minor injuries to the patients or EMS and clinical personnel. This includes the special care necessary for the safe and effective use of the product to avoid damage that may occur from use or misuse.



CAUTION – Safe Working Load (SWL)/Load Balance

Indicates the maximum charge for a safe use of the product.



CAUTION – Follow Instructions for Use

Call for action. Reminds the reader to consult the user manual for information.

© 2026 Technimount E.M.S. Holding Inc.

2.2. Labels

Labelling on the surface of the Technimount product, quickly identify potential risks and provides information to the user. A manufacturing label, including the serial numbers and the safe working load specifications (Figure 1) and an operation label (Figure 2), can be seen on the Technimount product.

2.2.1. Manufacturing Label

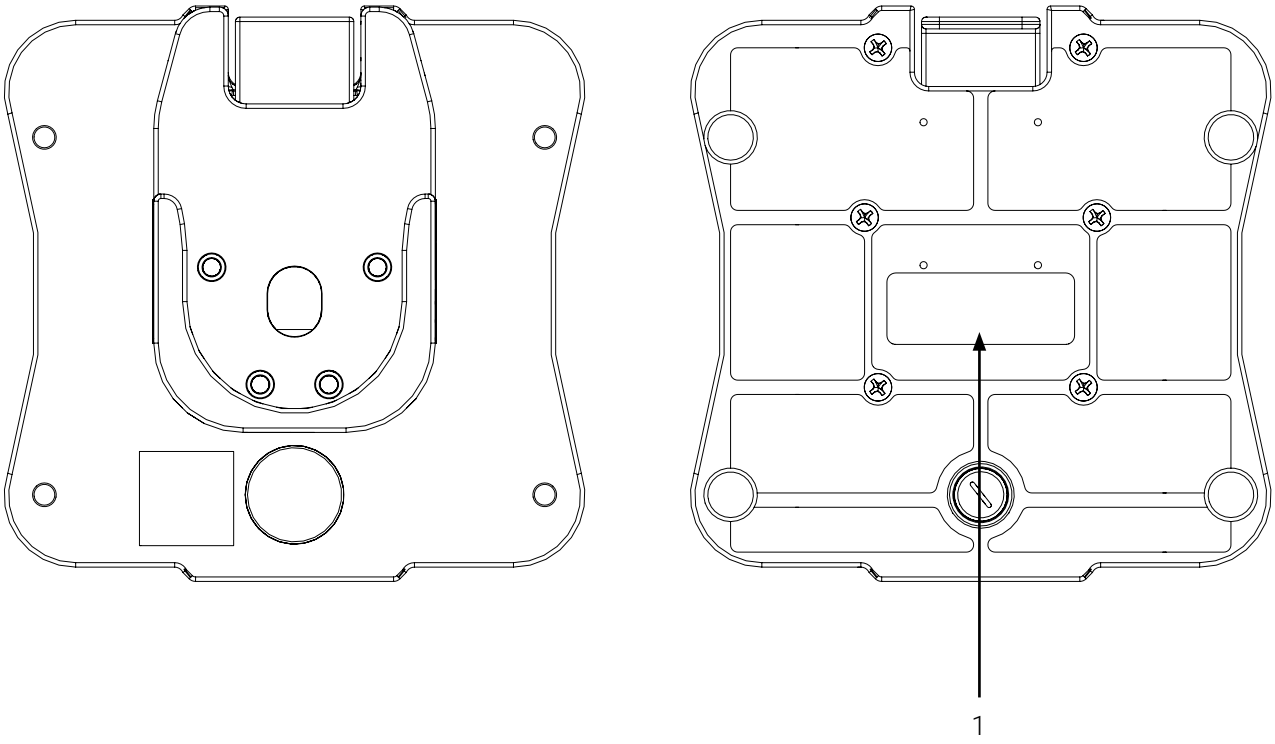

1. Manufacturing label

Figure 1: Location of the manufacturing label (bottom)

© 2026 Technimount E.M.S. Holding Inc.

2.2.2. Operation Label

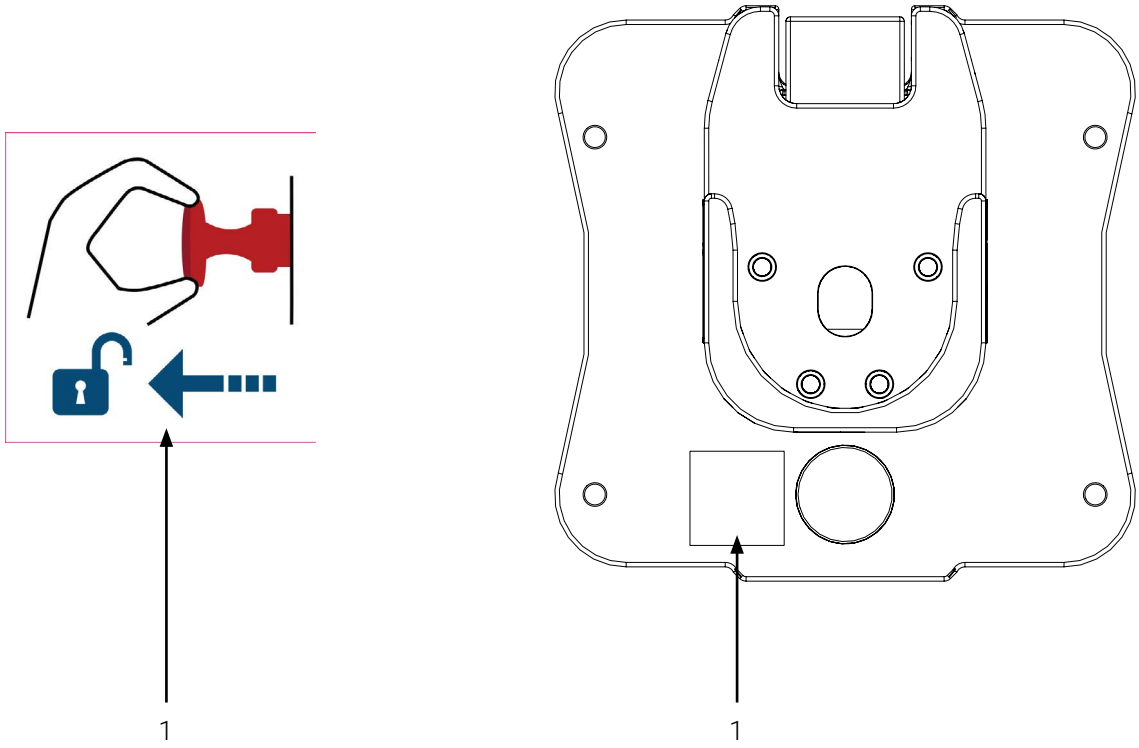

1. "Unlocking" operation label

Figure 2: Location of the operation label

2.3. Safety Measures

Carefully read all the safety measures herein before operating the Technimount product, and always abide by all the safety guidelines identified within this document.

Specific safety measures relating to the safety checks and the conditioned-based maintenance, intended for personnel who have an advanced level of competency, can be found in the « Maintenance » section on page 34.

WARNING – Unauthorized Systems

- The Q-Protrak is designed to be installed either vertically or horizontally using load-bearing tracks. Using unauthorized mounting systems may cause the equipment to fall, operate unpredictably, or fail, resulting in serious injury to the patients or to the EMS and clinical personnel. Refer to the « Technical Specifications » section on page 15 for compatibilities.
- The Q-Protrak was engineered and tested exclusively for use with specific authorized and compatible Technimount components and systems. Using any unauthorized and/or incompatible system may cause the equipment to fall, operate unpredictably, or fail, resulting in serious injury to the patients or to the EMS and clinical personnel.
- Technimount assumes no responsibility for any damage, malfunction, or injury arising from use of unauthorized or incompatible systems. Using any unauthorized and/or incompatible system may result in non-compliance with the applicable safety standards and will immediately void all warranties and liability coverage.
- Technimount products are intended for use only within their defined applications, including but not limited to, emergency medical services, critical care transport, and approved healthcare environments. Refer to the « Technical Specifications » section on page 15.
- Regulations and standards for safety are the sole responsibility of the end user. Ensure that your established internal protocols are updated and meet the technical specifications requirements herein (refer to the « Technical Specifications » section on page 15), as well as the local and regional compliance requirements before use.

© 2026 Technimount E.M.S. Holding Inc.

WARNING – Improper Installation

- The Q-Protrak should only be installed on rigid, structural surfaces that are suitable for their intended use, provided that all the applicable safety and structural requirements are met.
- Before installation, the mounting surface must be inspected and approved by qualified personnel (e.g., fleet maintenance, mechanical engineering, specialists, or regulatory-approved authorities) to ensure compliance with Technimount's specifications and instructions, the structural integrity of the supporting structure isn't compromised, the mounting surface can safely support all applied loads under normal use conditions, and that the installation won't interfere with other critical systems or safety equipment.
- Improper installations and/or installations on surfaces that haven't been inspected and approved by qualified personnel may cause the equipment to fall, operate unpredictably, or fail, resulting in serious injury to the patients or to the EMS and clinical personnel.
- Technimount assumes no responsibility for any damage, malfunction, or injury arising from improper installations and/or installations on surfaces that haven't been inspected and approved according to these requirements.
- Follow the installation instructions as detailed in the « Install the Load-Bearing Tracks » section on page 31 for a safe and reliable installation of your Q-Protrak and to avoid risks that may cause the equipment to fall, operate unpredictably, or fail, resulting in serious injury to the patients or to the EMS and clinical personnel.

WARNING – Risk of Injury

- **Do not install and/or remove** the Q-Protrak, the mounting bracket and/or the medical device during take-off and/or landing, to avoid risks that may cause damage or the equipment to fall or operate unpredictably, resulting in serious injury to the patients or to the EMS and clinical personnel.
- **Do not install** the Q-Protrak with the quick-release button oriented upwards on vertical load-bearing tracks, to avoid risks that may cause damage or the equipment to fall or operate unpredictably, resulting in serious injury to the patients or to the EMS and clinical personnel.
- **Do not use** the Q-Protrak if there are any loose or missing screws, to avoid risks that may cause damage or the equipment to fall or operate unpredictably, resulting in serious injury to the patients or to the EMS and clinical personnel.
- Immediately stop using the Q-Protrak if any serious incident occurs and inform authorized personnel, to contact the Technical Support at techsupport@technimount.com for a remedial action plan and to report the incident to the applicable regulatory agency.

© 2026 Technimount E.M.S. Holding Inc.

CAUTION – Safe Handling and Operation

- Always install the Q-Protrak on the load-bearing tracks before installing the medical device, to avoid risks that may cause damage or the equipment to fall or operate unpredictably, resulting in serious injury to the patients or to the EMS and clinical personnel.
- Always remove the medical device from the Q-Protrak before moving it left or right on the load-bearing tracks and/or before removing it from the tracks, to avoid risks that may cause damage or the equipment to fall or operate unpredictably, resulting in serious injury to the patients or to the EMS and clinical personnel.
- Always ensure that the Q-Protrak is correctly installed and secured on the load-bearing tracks before it is used, to avoid risks that may cause damage or the equipment to fall or operate unpredictably, resulting in serious injury to the patients or to the EMS and clinical personnel.
- Always ensure that the medical device is secured on the Q-Protrak before it is used, to avoid risks that may cause damage or the equipment to fall or operate unpredictably, resulting in serious injury to the patients or to the EMS and clinical personnel.
- Always pay close attention **not to wedge** the power cords or tubing during the installation/removal of the Q-Protrak, the mounting bracket, and the medical device.

CAUTION – Safe Practice

- Always pay close attention to the two (2) safety mechanisms of the Q-Protrak, to avoid risks that may cause damage or the equipment to fall or operate unpredictably, resulting in serious injury to the patients or to the EMS and clinical personnel. Follow the recommended maintenance plan and its guidelines, as described in this user manual.
- Always practice safely operating the Q-Protrak until the manipulations have been perfected, before use with patients. Improper use of the mounting system may cause damage or the equipment to fall or operate unpredictably, resulting in serious injury to the patients or to the EMS and clinical personnel.

CAUTION – Safe Working Load (SWL)/Load Balance

- **Do not overload or exceed** the total Safe Working Load (SWL) of the Q-Protrak, to avoid tipping incidents or risks of collapsing. Refer to the « Technical Specifications » section on page 15 for the SWL.
- The Safe Working Load (SWL) of the Q-Protrak **does not override** the maximum load capacity of another Technimount product or system, neither those of the medical devices, accessories and/or medical equipment accessories that could be placed in bags and drawers for example. To comply with the SWL specification, the entire configuration should be taken into account. Refer to the user documentation of each product applicable to your specific configuration for specifications.

CAUTION – Follow the Instruction for Use

Always refer to your established internal protocols, as well as read and abide by the safety guidelines and instructions provided in the user documentation of the Q-Protrak, the mounting bracket and the medical device.

© 2026 Technimount E.M.S. Holding Inc.

3. Technical Specifications



The content in this section is intended for personnel who have a competent, proficient or advanced level of competency. Refer to the « User Competency » section on page 5 if needed.

Product Name	Q-Protrak – FL
Description	Mounting system specifically designed to secure and transport medical devices and accessories on vertical/horizontal load-bearing tracks during air emergency medical services and critical care transport
Product Code	3500-10-QPR-FL
Operating Environment	EMS/CCT (air)
Compliance	Tested in compliance with 14 CFR 23.561, 14 CFR 25.561, 14 CFR 27.561, 14 CFR 29.561
Expected Service Life	5 years
Compatible Mounting System	MS33601, load-bearing tracks
Compatible Mounting Brackets	Bracket Pro Serie products with micro discs and anti-rotation micro discs
Dimensions (W X D X H)	212.85 mm (8.38 in.) W X 204.47 mm (8.05 in.) D X 56.64 mm (2.23 in.) H
Weight	1.45 kg (3.17 lb)
Composition	Aluminum
Total Safe Working Load (SWL)	13.61 kg (30 lb)
Operating Temperature	- 35° C to 45° C (- 31° F to 113° F)
Tested and Approved Cleaning Solutions	- Oxivir, 5% Hydrogen Peroxide with Peracetic Acid (AHP) - Lavo 12, 10 000 ppm Sodium Hypochlorite - TNT-100, 5% Quaternary Ammonium Compound - Spectro-Sept, 5% Ethyl Alcohol - Spectrol, 5% EDTA salt
Options	N/A

© 2026 Technimount E.M.S. Holding Inc.

4. Orientation Illustrations

The content in this section is intended for personnel who have a competent, proficient or advanced level of competency. Refer to the « User Competency » section on page 5 if needed.

The orientations referenced herein are from the EMS and clinical personnel standpoint, when facing the front of the installation surface. The Q-Protrak can be installed on vertical load-bearing tracks with the quick-release button oriented towards the top (Figure 3A) or on horizontal load-bearing tracks, with the quick-release button oriented towards the back of the installation surface (Figure 3B) and/or rotated 180°, with the button oriented towards the front of the installation surface (Figure 3C).

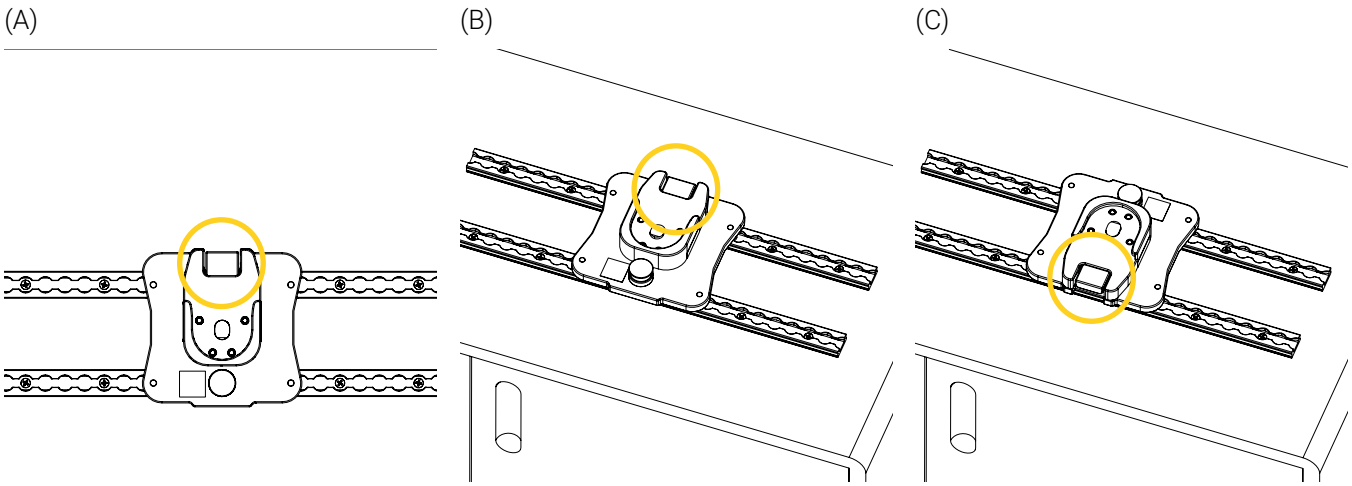

Figure 3: Q-Protrak orientation illustrations

© 2026 Technimount E.M.S. Holding Inc.

5. Illustrated Parts

The content in this section is intended for personnel who have a competent, proficient or advanced level of competency. Refer to the « User Competency » section on page 5 if needed.

Figure 4 illustrates the main components of the Q-Protrak. Figure 5 illustrates the main components of the load-bearing tracks. Refer to the user documentation of your specific track model for details, safety guidelines and safe use, if needed.

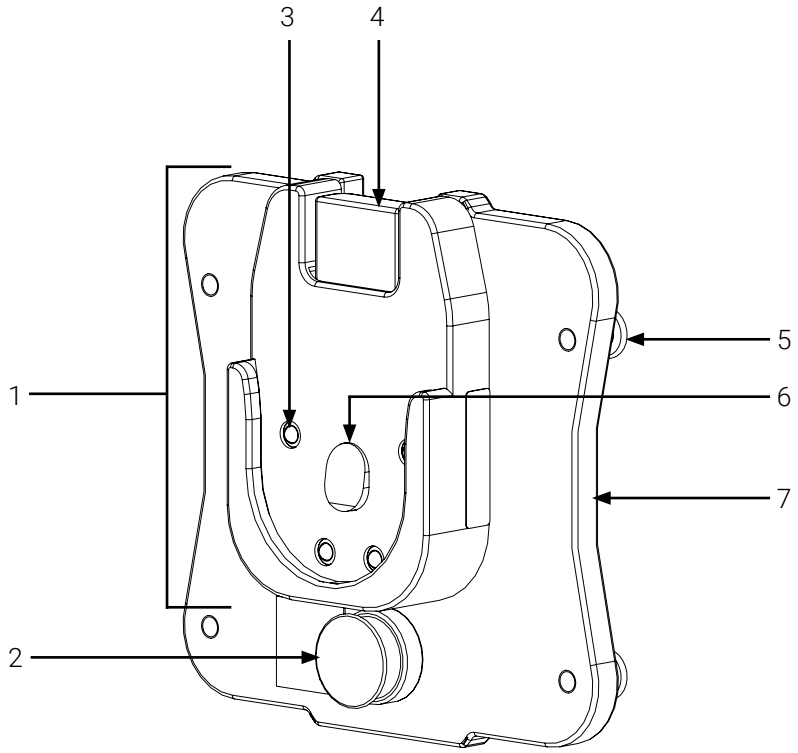

1. Micro Base
2. Pull release knob
3. Plungers (4X)
4. Quick-release button
5. Stud fitting (4X)
6. Locking mechanism
7. Adaptive plate

Figure 4: Q-Protrak components

© 2026 Technimount E.M.S. Holding Inc.

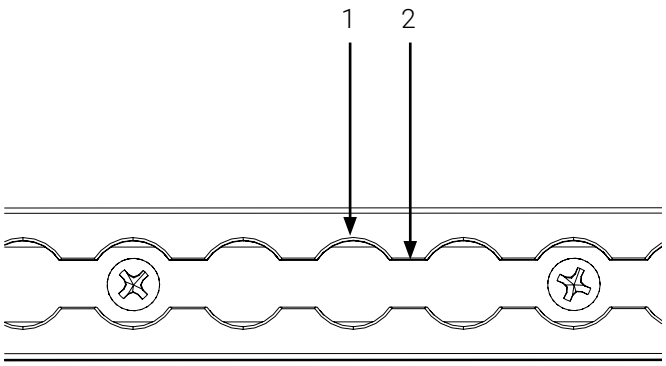

1. Slot	2. Anchor point

Figure 5: Load-bearing tracks

© 2026 Technimount E.M.S. Holding Inc.

6. Illustrated Dimensions

The content in this section is intended for personnel who have a competent, proficient or advanced level of competency. Refer to the « User Competency » section on page 5 if needed.

Figure 6 illustrates the dimensions of the Q-Protrak when installed on vertical load-bearing tracks and Figure 7, when installed on horizontal load-bearing tracks.

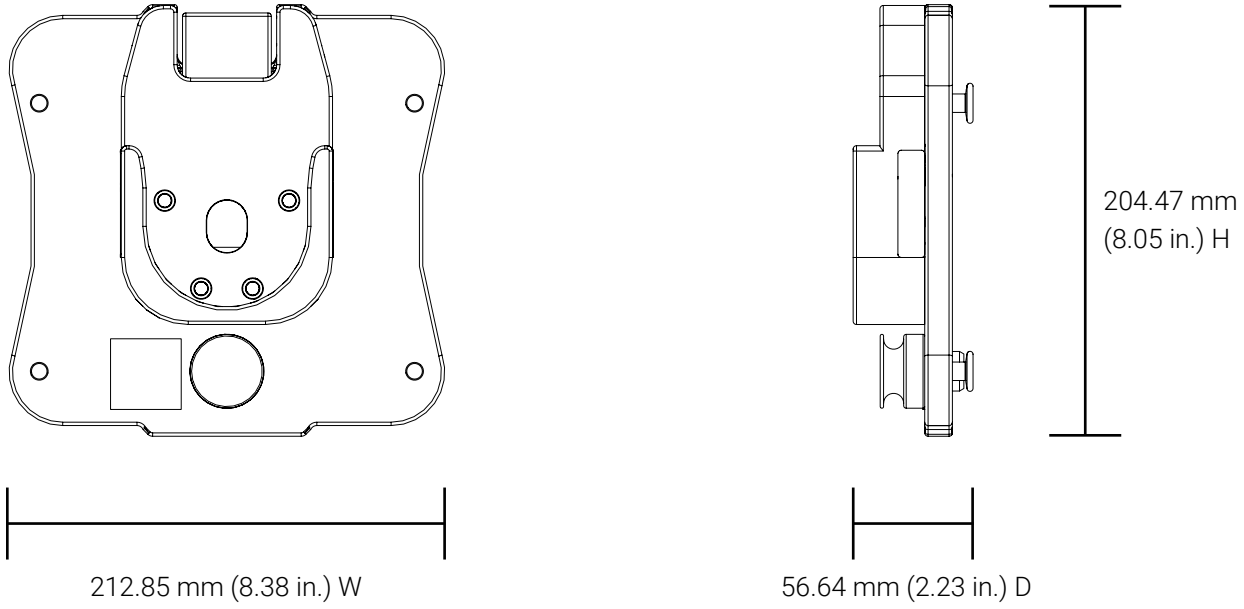

Figure 6: Q-Protrak dimensions (vertical load-bearing tracks)

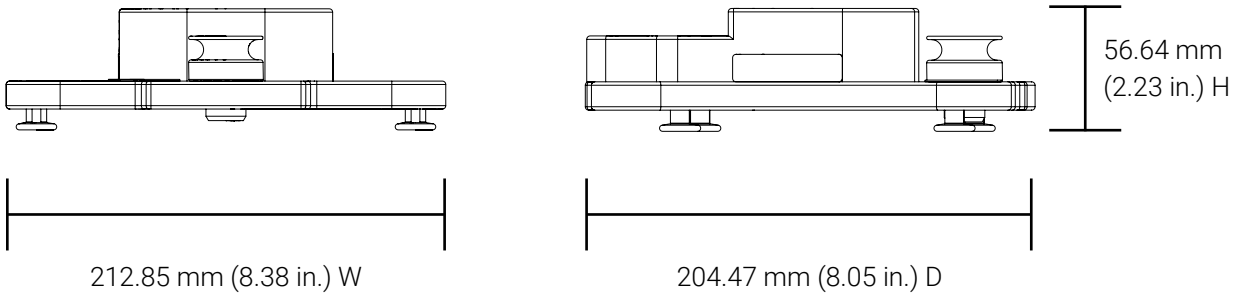

Figure 7: Q-Protrak dimensions (horizontal load-bearing tracks)

© 2026 Technimount E.M.S. Holding Inc.

7. Safety Mechanisms

The content in this section is intended for personnel who have a competent, proficient or advanced level of competency. Refer to the « User Competency » section on page 5 if needed.

NOTE : The load-bearing tracks are customer-provided. The illustrations herein are for user-comprehension purposes and may differ from your actual configuration. The instructions apply to any compatible load-bearing tracks, mounting brackets and medical devices. Refer to their user documentation for the safety guidelines and safe use, if needed.

There are two (2) spring-loaded safety mechanisms on the Q-Protrak. A pull release knob (Figure 8A) is used to remove the Q-Protrak from load-bearing tracks and/or to move the mounting system to another position on the track. A quick-release button (Figure 8B) is used to remove the medical device from the Q-Protrak. Refer to the subsequent sections for operational details of each mechanism and to the « Illustrated Parts » section on page 17 if needed.

(A) (B)

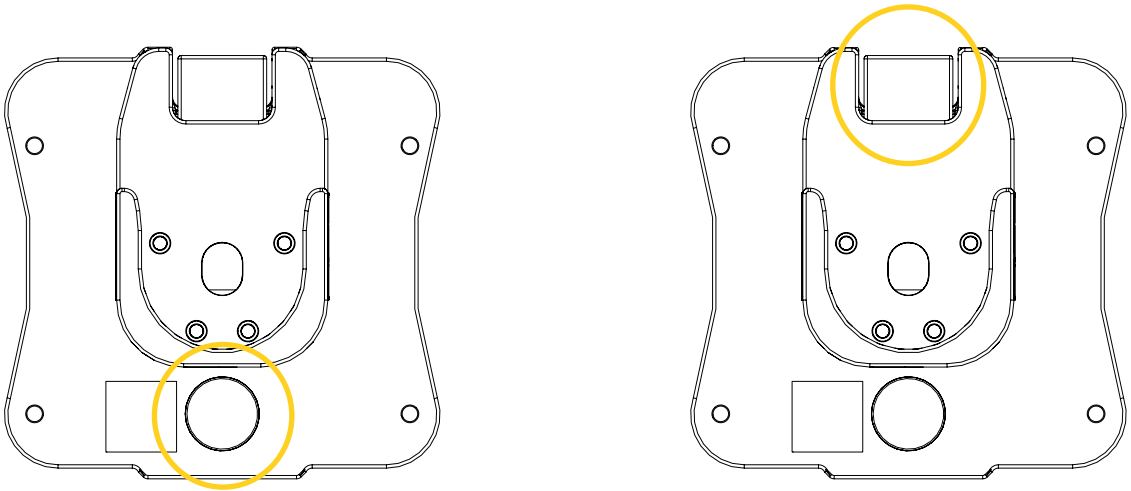

Figure 8: Q-Protrak safety mechanisms

© 2026 Technimount E.M.S. Holding Inc.

7.1. Activate the Safety Mechanism of the Mounting System

The safety mechanism activates when the stud fittings located under the Q-Protrak insert in the anchor points of the top and bottom load-bearing tracks (Figure 9). When the click sound is heard, the Q-Protrak is locked on the tracks and the medical device can be safely installed on the mounting system. Refer to the « Illustrated Parts » section on page 17 and the rail manufacturer's user documentation if needed.

(A) (B)

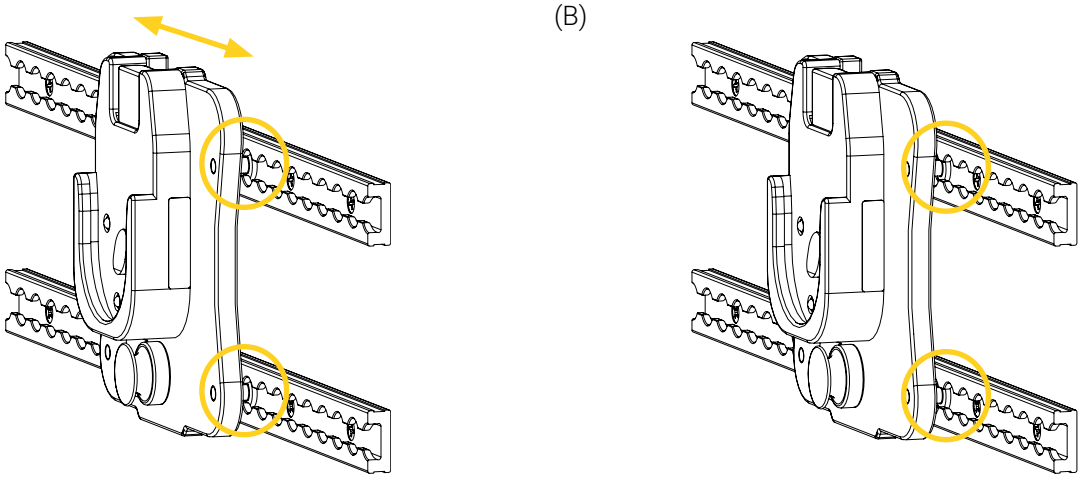

Figure 9: Activating the mounting system's safety mechanism

7.2. Deactivate the Safety Mechanism of the Mounting System

The safety mechanism deactivates when the pull release knob is pulled (Figure 10). Unlocked, the Q-Protrak can be repositioned along the tracks or removed from the tracks using the slots or the ends of the tracks. Refer to the « Illustrated Parts » section on page 17 and the rail manufacturer's user documentation if needed.

(A) (B)

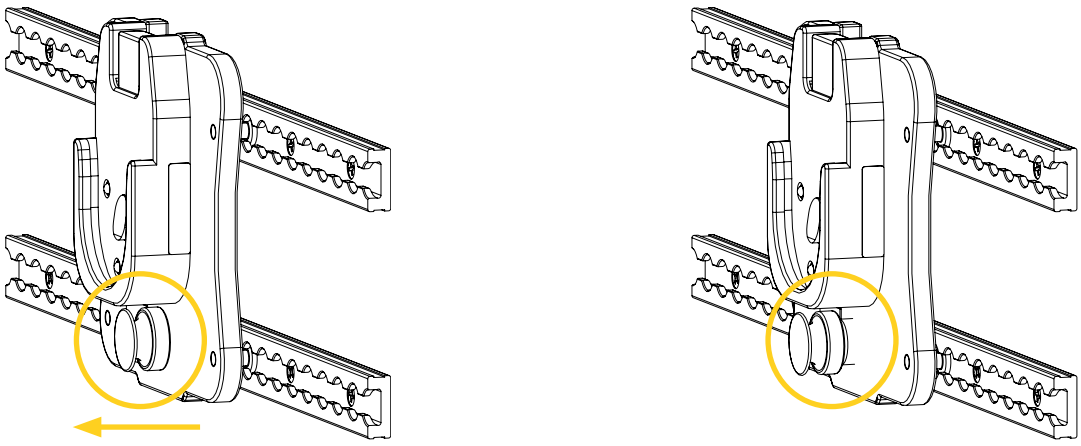

Figure 10: Deactivating the mounting system's safety mechanism

© 2026 Technimount E.M.S. Holding Inc.

7.3. Activate the Safety Mechanism of the Micro Base

The safety mechanism activates when the micro disc of the medical device's mounting bracket is inserted in the Micro Base of the Q-Protrak (Figure 11A). When the disc is pushed towards the back of the base, it slides on the integrated plungers until the locking mechanism inserts the cavity of the disc. When the click sound is heard, the Q-Protrak is locked and the medical device is secured (Figure 11B). Locked, the button and the locking mechanism protrude from the base (Figure 11C). Refer to the « Illustrated Parts » section on page 17 and the Micro Base User Manual if needed.

(A) (B) (C)

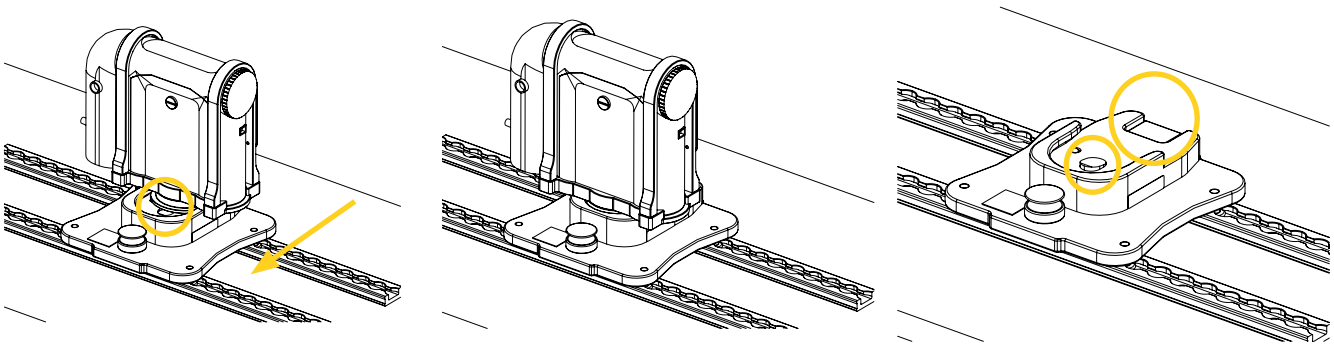

Figure 11: Activating the Micro Base safety mechanism (horizontal load-bearing tracks illustrated)

7.4. Deactivate the Safety Mechanism of the Micro Base

The safety mechanism deactivates when the quick-release button of the Micro Base is pressed (Figure 12A). When pressed, the disc of the medical device's mounting bracket is pushed towards the front of the base, the disc is released from the locking mechanism and the medical device can be removed from the mounting system (Figure 12B). Unlocked, the button and locking mechanisms are inserted in the base (Figure 12C). Refer to the « Illustrated Parts » section on page 17 and the Micro Base User Manual if needed.

(A) (B) (C)

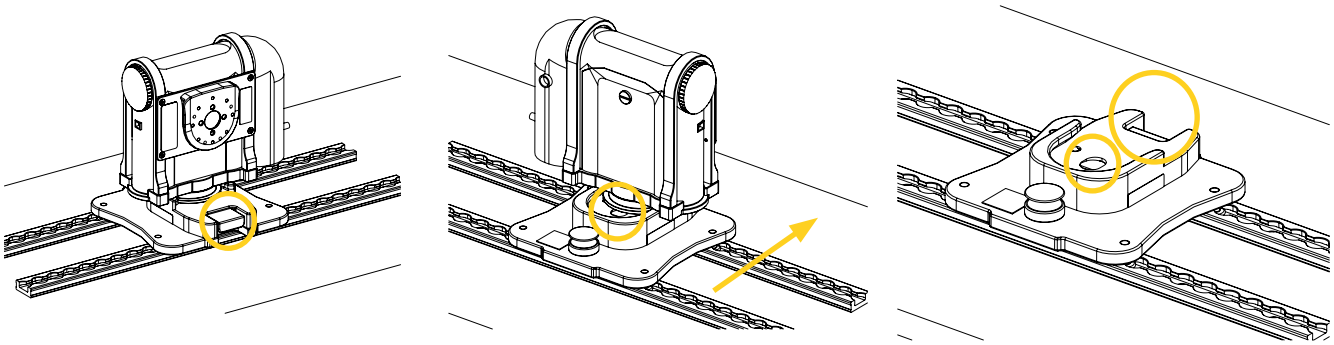

Figure 12: Deactivating the Micro Base safety mechanism (horizontal load-bearing tracks illustrated)

© 2026 Technimount E.M.S. Holding Inc.

8. Operate the Q-Protrak

The content in this section is intended for personnel who have a competent, proficient or advanced level of competency. Refer to the « User Competency » section on page 5 if needed.

NOTE : The illustrations herein are for user-comprehension purposes and may differ from your actual configuration. The instructions apply to any compatible load-bearing tracks, mounting brackets and medical devices. Refer to their user documentation for the safety guidelines and safe use, if needed.

8.1. Installing the Q-Protrak on the Load-Bearing Tracks

1. Align and insert the stud fittings located behind the Q-Protrak in the slots of the vertical load-bearing tracks with the knob towards the top (Figure 13) or in the slots of the top and bottom horizontal load-bearing tracks in the orientation of your choice (Figure 14). Refer to the « Orientation Illustrations » section on page 16 if needed.
2. Slide the Q-Protrak towards the left or towards the right along the vertical tracks (Figure 13) or back and forth along the horizontal tracks (Figure 14) until the stud fittings insert in the anchor points and you hear the click sound.

(A) (B) (C)

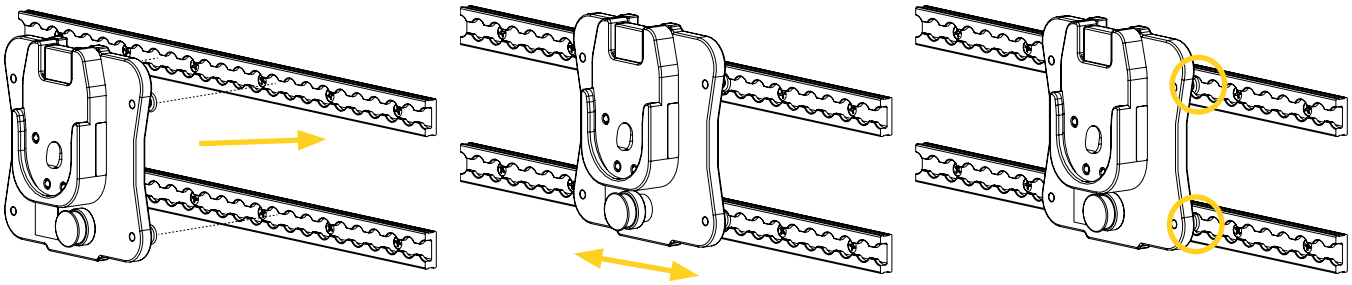

Figure 13: Installing the Q-Protrak on vertical load-bearing tracks

© 2026 Technimount E.M.S. Holding Inc.

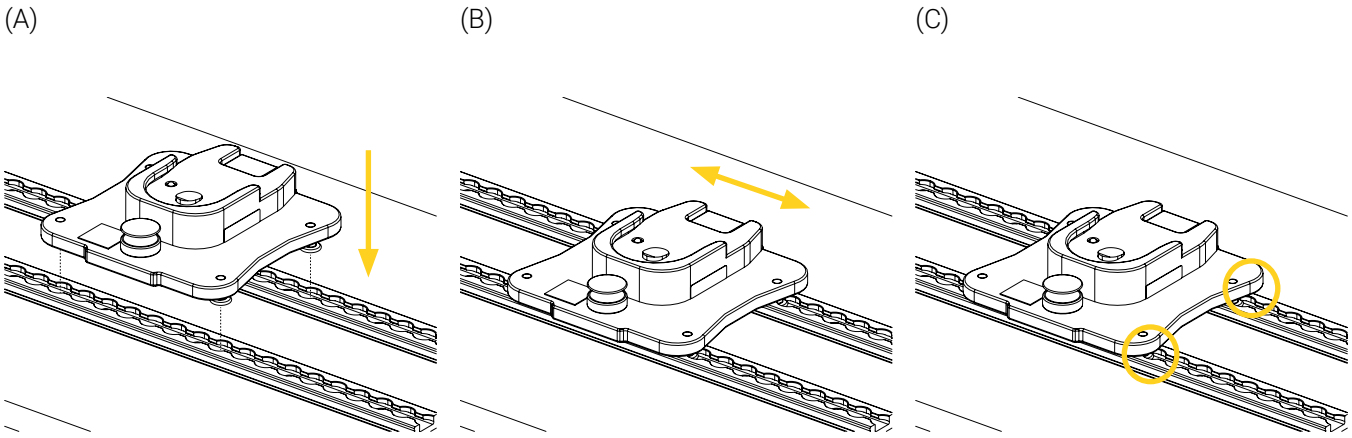

Figure 14: Installing the Q-Protrak on horizontal load-bearing tracks

3. Move the Q-Protrak up and down/back and forth and from side to side a few times to ensure all four (4) stud fittings are inserted in the tracks and that the mounting system is locked and secured. If it does not move during the verification, it is properly installed and locked.

The installation of the Q-Protrak on the load-bearing tracks is complete.

8.2. Removing the Q-Protrak from Load-Bearing Tracks

1. Pull and hold the pull release knob, slide the Q-Protrak towards the left or towards the right along the vertical load-bearing tracks (Figure 15) or back and forth along the horizontal load-bearing tracks (Figure 16) until the stud fittings reach the slots of the tracks, then release the knob.
2. Remove the Q-Protrak from the tracks (Figure 15 and Figure 16).

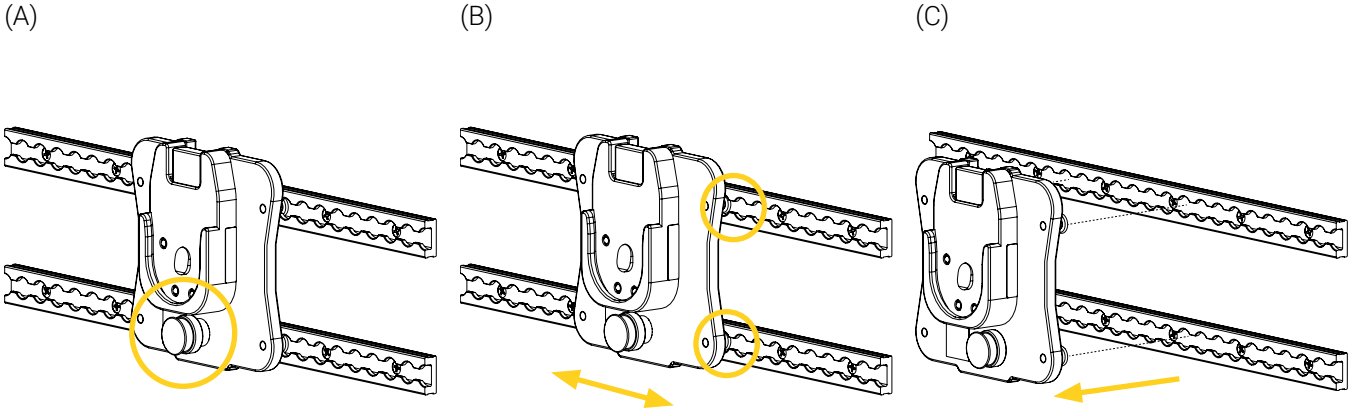

Figure 15: Removing the Q-Protrak from vertical load-bearing tracks

© 2026 Technimount E.M.S. Holding Inc.

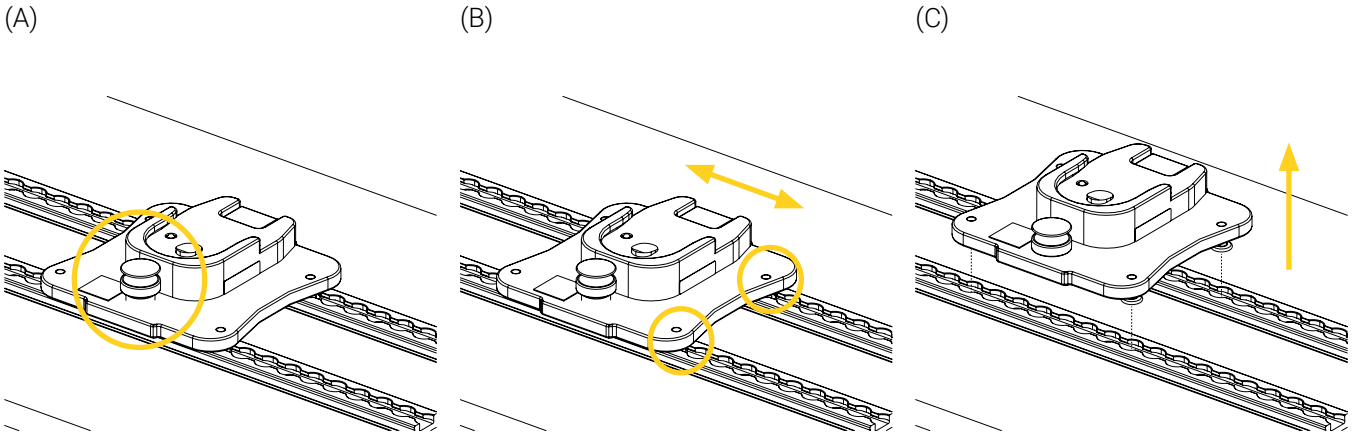

Figure 16: Removing the Q-Protrak from horizontal load-bearing tracks

3. Set the Q-Protrak aside on a clean surface, or place it in its dedicated storage space. Refer to your established internal protocols if needed

The removal of the Q-Protrak from the vertical load-bearing tracks is complete.

8.3. Installing the Medical Device on the Q-Protrak

1. Align and insert the anti-rotation micro disc of the medical device's mounting bracket in the Micro Base of the Q-Protrak vertically (Figure 17) or the micro disc of the medical device's mounting bracket in the Micro Base of the Q-Protrak horizontally (Figure 18) until you hear the click sound.

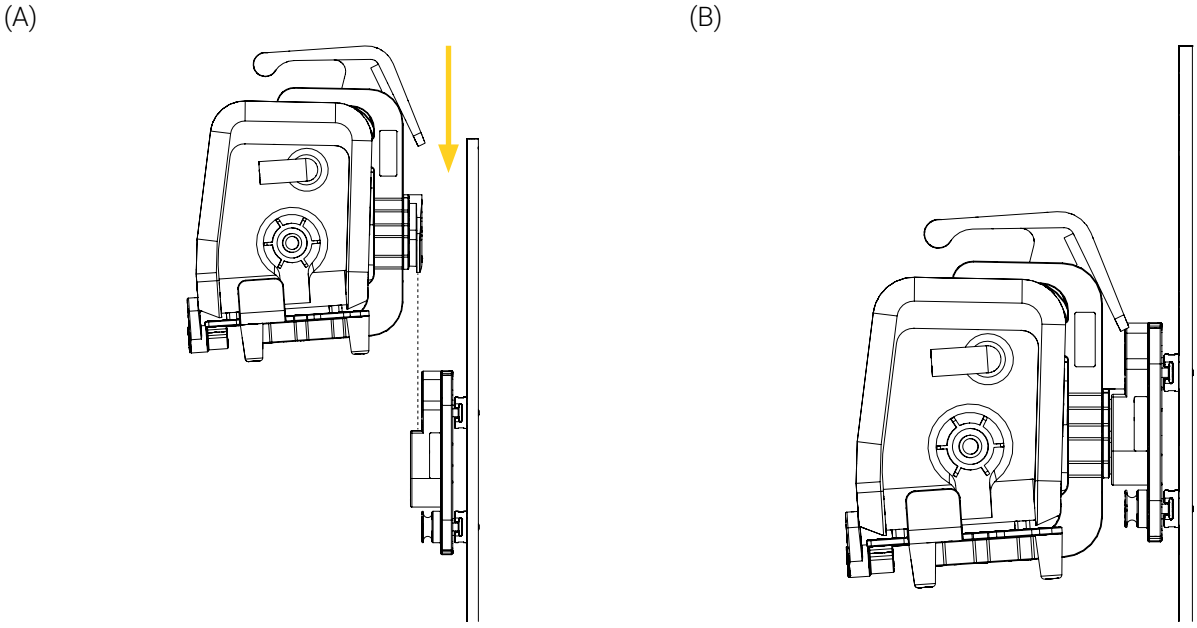

Figure 17: Installing the medical device in the Micro Base of the Q-Protrak (vertical load-bearing tracks)

© 2026 Technimount E.M.S. Holding Inc.

(A) (B)

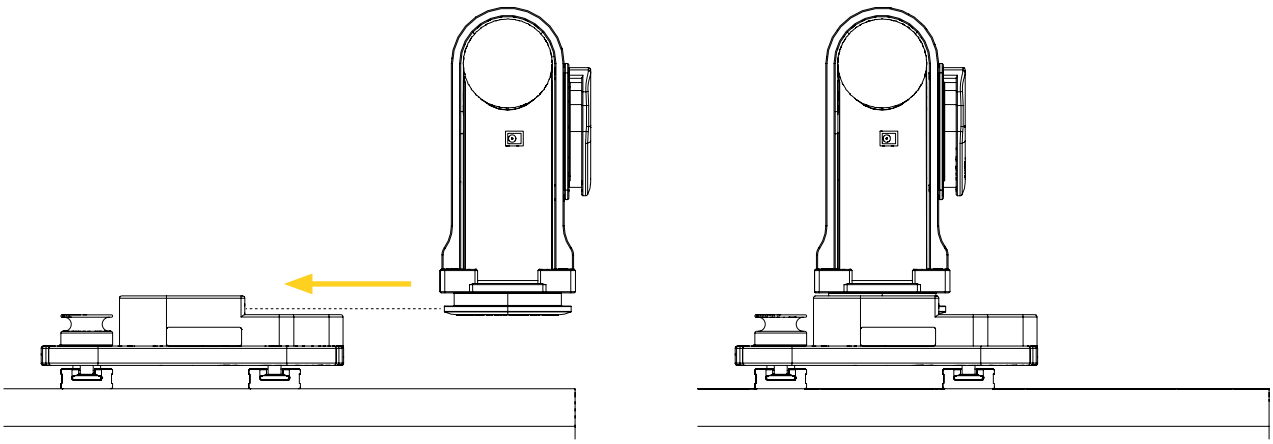

Figure 18: Installing the medical device in the Micro Base of the Q-Protrak (horizontal load-bearing tracks)

2. Move the medical device from up and down or back and forth a few times to ensure it is properly installed and locked on the Q-Protrak. If it does not move during the verification, it is properly installed and secured.
3. For medical devices installed on horizontal load-bearing tracks, turn the medical device up to 360° clockwise or counterclockwise to the desired position (Figure 19). Refer to the mounting bracket's user documentation in needed.

   NOTE : Only medical devices that are installed in a mounting bracket with a micro disc can be rotated on the Q-Protrak.

(A) (B) (C)

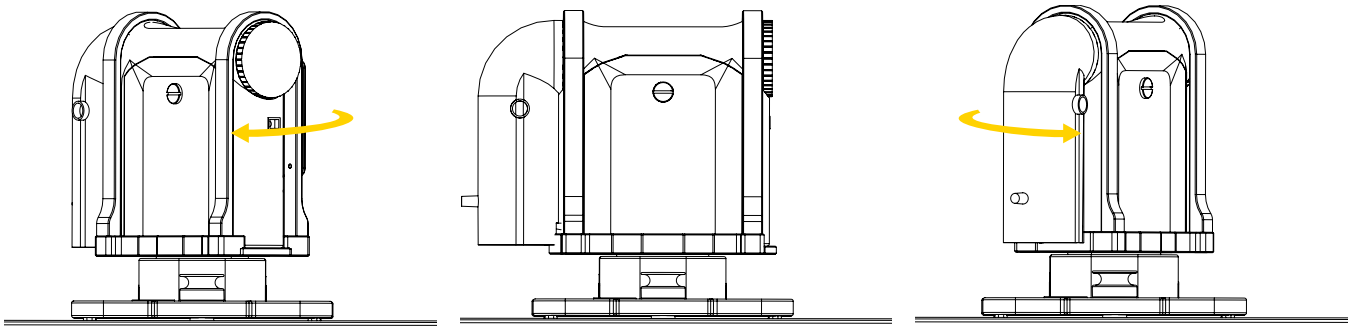

Figure 19: Rotating the medical device on the Q-Protrak

The installation of the medical device on the Q-Protrak is complete.

© 2026 Technimount E.M.S. Holding Inc.

8.4. Removing the Medical Device from the Q-Protrak

1. Press down and hold the quick-release button of the Q-Protrak's Micro Base, then pull the medical device vertically until the anti-rotation micro disc of the mounting bracket is out of the base (Figure 20) or pull the medical device horizontally until the micro disc of the mounting bracket is out of the base (Figure 21), then release the button.

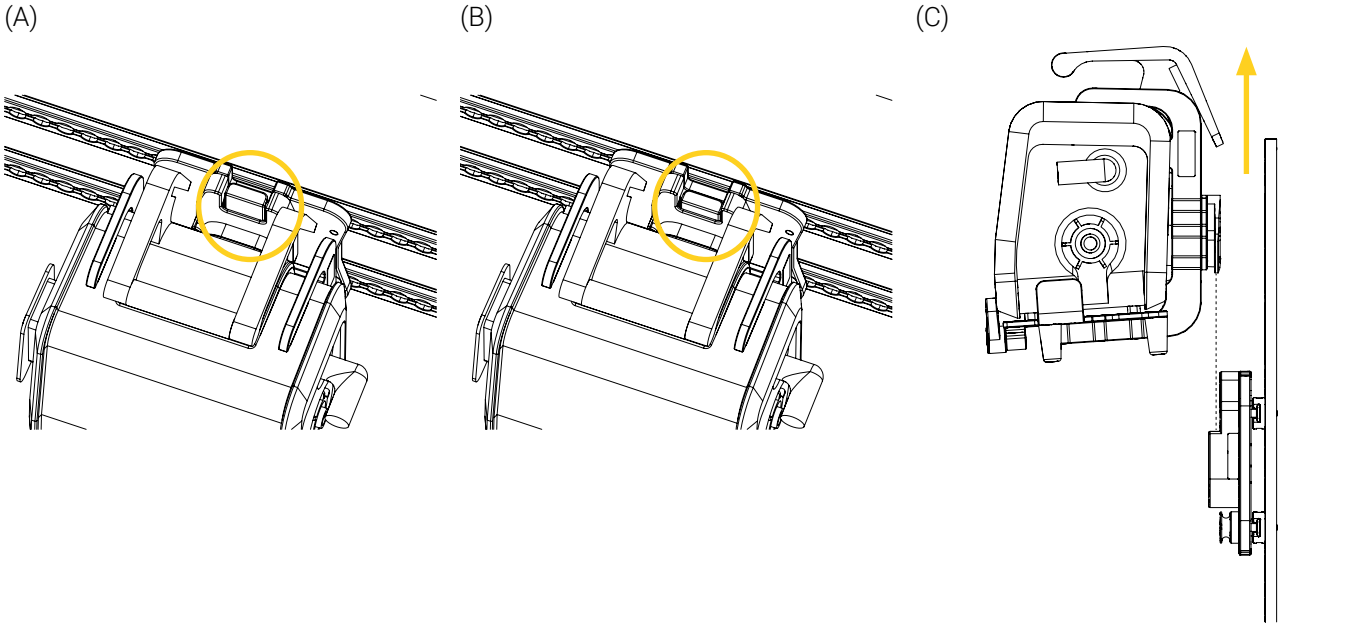

Figure 20: Removing the medical device from the Micro Base of the Q-Protrak (vertical load-bearing tracks)

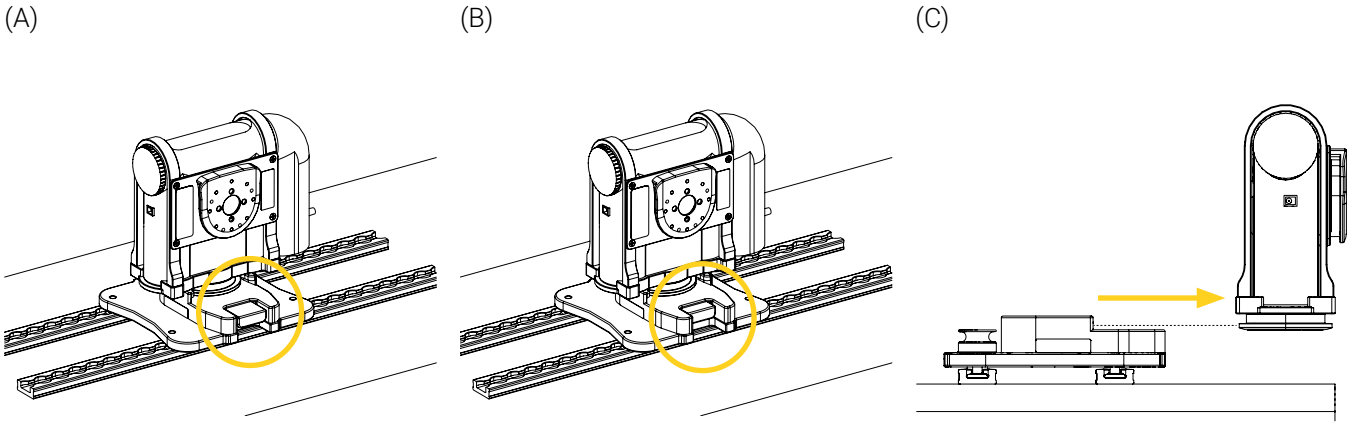

Figure 21: Removing the medical device from the Micro Base of the Q-Protrak (horizontal load-bearing tracks)

2. Set the medical device aside on a clean surface, or place it in its dedicated storage space. Refer to your established internal protocols if needed

The removal of the medical device from the Q-Protrak is complete.

© 2026 Technimount E.M.S. Holding Inc.

Annex I Skills Assessment of the EMS and Clinical Personnel



The content in this section is intended for personnel who have a proficient level of competency. Refer to the « User Competency » section on page 5 if needed.

Following training, a skills assessment should be given to each member of the EMS and clinical personnel to ensure they have fully comprehended the labelling, warnings and cautions, potential risks, safe practices and proper operating procedures needed to safely and effectively use the Q-Protrak. Consider adding the following to your internal training protocols.

Trainee name: _____ Unit: _____

Assessor name: _____ Date: _____

SKILLS ASSESSMENT		
SKILL CRITERIA	PASSED	FAILED
Labelling		
- Able to identify meaning and potential risks associated with the different safety labels:		
- Manufacturing label	☐	☐
- Safe Working Load (SWL)	☐	☐
- "Unlocking" operation label	☐	☐
Safety Measures		
- Knows that the Q-Protrak is designed to be installed either vertically or horizontally using load-bearing tracks and that using unauthorized mounting systems may cause the equipment to fall, operate unpredictably, or fail.	☐	☐
- Knows that the Q-Protrak was engineered and tested exclusively for use with specific authorized and compatible Technimount components and systems and that using any unauthorized and/or incompatible system may cause the equipment to fall, operate unpredictably, or fail.	☐	☐
- Knows **not to install and/or remove** the Q-Protrak, the mounting bracket and/or the medical device during take-off and/or landing.	☐	☐
- Knows **not to install** the Q-Protrak with the quick-release button oriented upwards on vertical load-bearing tracks.	☐	☐
- Knows **not to use** the Q-Protrak if there are any loose or missing screws.	☐	☐
- Knows to immediately stop using the Q-Protrak if any serious incident occurs and to inform authorized personnel.	☐	☐

© 2026 Technimount E.M.S. Holding Inc.

SKILLS ASSESSMENT		
SKILL CRITERIA	PASSED	FAILED
- Knows to always install the Q-Protrak on the load-bearing tracks before installing the medical device.	☐	☐
- Knows to always remove the medical device from the Q-Protrak before moving it left or right on the load-bearing tracks and/or before removing the Q-Protrak from the load-bearing tracks.	☐	☐
- Knows to always ensure that the Q-Protrak is correctly installed and secured on the load-bearing tracks before it is used.	☐	☐
- Knows to always ensure that the medical device is secured on the Q-Protrak before it is used.	☐	☐
- Knows to always pay close attention **not to wedge** the power cords or tubing during the installation/removal of the Q-Protrak, the mounting bracket, and the medical device.	☐	☐
- Knows to always pay close attention to the two (2) safety mechanisms of the Q-Protrak.	☐	☐
- Knows to always practice safely operating the Q-Protrak until the manipulations have been perfected, before use with patients and that improper use of the mounting system may cause damage or the equipment to fall or operate unpredictably.	☐	☐
- Knows **not to overload or exceed** the total Safe Working Load (SWL) of the Q-Protrak.	☐	☐
- Knows that the Safe Working Load (SWL) of the Q-Protrak **does not override** the maximum load capacity of another Technimount product or system, neither those of the medical devices, accessories and/or medical equipment accessories that could be placed in bags for example.	☐	☐
- Knows to always refer to their established internal protocols, as well as read and abide by the safety guidelines and instructions provided in the user documentation of the Q-Protrak, the mounting bracket and the medical device.	☐	☐
Operation		
- Able to install/remove the Q-Protrak on/from the load-bearing tracks.	☐	☐
- Able to install/remove the medical device on/from the Q-Protrak.	☐	☐
- Able to rotate the medical device on a Q-Protrak (mounting brackets with a micro disc).	☐	☐

© 2026 Technimount E.M.S. Holding Inc.

Annex II Unpack the Q-Protrak



The content in this section is intended for personnel who have an advanced level of competency. Refer to the « User Competency » section on page 5 if needed.

1. Inspect the shipping box(es) for signs of damage before accepting shipment. Take pictures and report them promptly if applicable.
2. Move the shipping box(es) to the location of the installation.
3. Open the shipping box(es).
4. Unpack the box(es) and ensure that all shipping and packaging materials have been properly removed, prior to installation.

   NOTE : Keep all packaging material for future use.
5. Identify the items included in the shipping box(es), then set them aside. Refer to the « Install the Load-Bearing Tracks » section on page 31 for the required parts.
6. Inspect the items for signs of damage. Take pictures and report them promptly if applicable.

© 2026 Technimount E.M.S. Holding Inc.

Annex III Install the Load-Bearing Tracks

The content in this section is intended for personnel who have an advanced level of competency. Refer to the « User Competency » section on page 5 if needed.

WARNING – Risk of Injury

Always wear/use the appropriate Personal Protection Equipment (PPE) based on your established internal protocols (e.g., gloves, eyewear, etc.) during the installation.

NOTE : The load-bearing tracks are customer-provided. The illustrations herein are for user-comprehension purposes and may differ from your actual configuration. The instructions apply to any compatible load-bearing tracks, mounting brackets and medical devices. Refer to their user documentation for the safety guidelines and safe use, if needed.

Estimated Installation Time

- 10 minutes

Customer-Provided Tools and Parts

- MS33601 Load-bearing track (2X)
- Ruler
- Marker
- Level
- Drill bit #7
- Drill
- SS 1/4-20 in., 100°, fully threaded Phillips flat head screws. The number of screws will depends on the length of your rails.

  NOTE : The length of the screws will depend on the depth of the installation surface.
- Phillips-head screwdriver #2

© 2026 Technimount E.M.S. Holding Inc.

Installation Procedure

1. Inspect the installation surface to ensure that all the applicable safety and structural requirements are met. Refer to your established internal protocols, the aircraft user documentation and the « Safety Measures » section on page 12 if needed.
2. Determine the location for the highest/furthest of the two (2) load-bearing tracks and mark the position on the installation surface using a marker.
3. Place a track at the determined location, then mark the screw holes, minimally every 101.6 mm (4 in.) W apart, center to center (Figure 22A), using a marker.

   NOTE : Although it is not mandatory, using a level is recommended to ensure that the track will be perfectly leveled across the entire length.

4. Mark the screw holes of the second track using a marker, then set aside the track momentarily. The marking should be vertically aligned with the previous markings and 127 mm (5 in.) H, center to center (Figure 22B).

(A) (B)

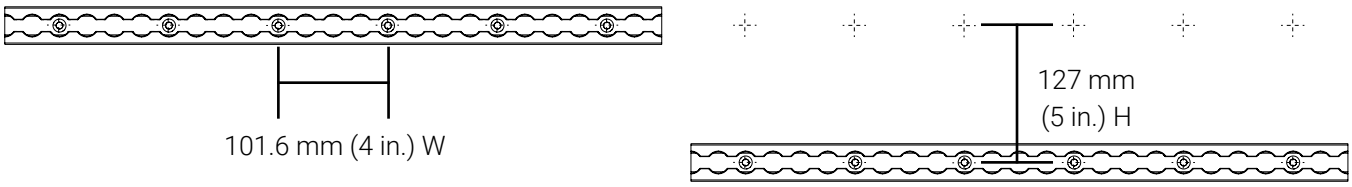

Figure 22: Marking the position of the load-bearing tracks prior to drilling

© 2026 Technimount E.M.S. Holding Inc.

5. Drill the holes (Figure 23A) using a drill and drill bit #7.
6. Install the tracks (Figure 23B) using SS 1/4-20 in., 100°, fully threaded Phillips flat head screws and a Phillips-head screwdriver #2.

(A) (B)

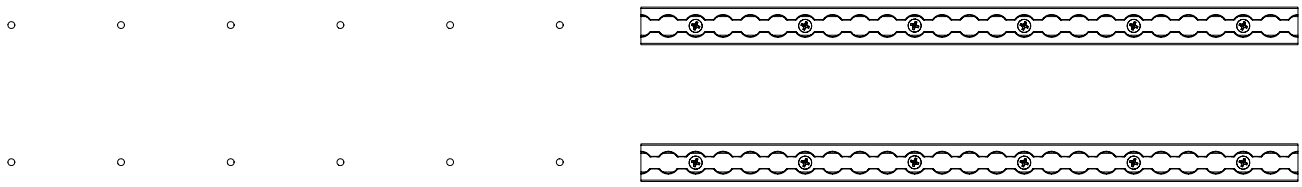

Figure 23: Installing the load-bearing tracks

7. Move the tracks up and down/back and forth and from side to side a few times to ensure that they are properly secured on the installation surface. If they do not move during the verification, they are properly secured.
8. Install the Q-Protrak on the load-bearing tracks. Refer to the « Installing the Q-Protrak on the Load-Bearing Tracks » section on page 23 if needed.

The installation of the load-bearing tracks is complete.

© 2026 Technimount E.M.S. Holding Inc.

Annex IV Maintenance



The content in this section is intended for personnel who have an advanced level of competency. Refer to the « User Competency » section on page 5 if needed.

Factors such as weather, environment, geographical location and individual usage will necessitate different needs. For the maintenance of the Q-Protrak, follow the guidelines listed herein and in accordance with your service's current maintenance practices and established internal protocols. Please contact Technical Support at techsupport@technimount.com for replacement parts or repair related issues, if needed.



WARNING – General Warning

- **Do not perform** the safety checks or the condition-based maintenance before having read the entire « Safety Measures » section on page 12 and the maintenance specific safety measures in this section, having read the entire content of this user manual, having gained in-depth knowledge and product comprehension, as well as having familiarized yourself with the standards and guidelines.
- Safety checks and a condition-based maintenance plan are required and should be established for all Technimount products.
- Perform the safety checks and maintenance operations as described herein. Failing to follow the recommended maintenance plan or its guidelines could cause premature damage to the product.
- Use only Technimount parts, maintenance procedures, cleaning solutions and lubricants (if applicable), as described herein. Using unapproved modified parts or procedures for the maintenance of the Technimount product may cause the system to be unstable and could cause injury to the patients or EMS and clinical personnel and void the product warranty.
- Replace damaged or worn-out parts if past their expected service life or when damaged (refer to the « Replacement Parts/Kits » section on page 41). Recycle damaged parts or dispose according to the environmental laws that apply to your jurisdiction and consult the Safety Data Sheets (SDS).



CAUTION – Safe Handling and Operation

- **Do not use** unauthorized, untested or unapproved cleaning products and disinfectants to perform condition-based maintenance, to avoid damaging the surface of your Technimount product and void the warranty. Technimount will not be held liable for damages resulting from the use of an unauthorized, untested or unapproved cleaning product.
- **Do not use** powered tools to screw the hardware during installation, as there is a risk of damage to the threads.
- **Do not steam clean or use ultrasonic cleaners** on the system or any of its components.
- **Do not immerse** the metal parts/components in water.
- To spot clean, the maximum water temperature should not exceed 82° C (180° F). The maximum water pressure should not exceed 1500 psi/103.5 BAR. If using a high pressure washer, the pressure nozzle must be kept a minimum of 609.6 mm (24 in.) from the product.
- When cleaning, always use the appropriate Personal Protection Equipment (PPE) based on your established internal protocols (e.g., gloves, eyewear, etc.).

© 2026 Technimount E.M.S. Holding Inc.



CAUTION – Corrosion

- Always rinse and dry the Q-Protrak components properly after using cleaning products. Certain types of cleaners may leave a corrosive residue on the surface of the product and could cause the premature corrosion of critical components. Refer to the product Safety Data Sheets (SDS) for chemical information or handling, storage and emergency measures in case of accident.
- Dispose of corrosive wastes according to the environmental laws that apply to your jurisdiction and consult the Safety Data Sheets (SDS).



CAUTION – Follow Instructions for Use

Always read and abide by all the safety guidelines identified, as well as follow all of the instructions provided by the manufacturer of the cleaning product.

Maintenance Frequency

- Safety checks and the condition-based maintenance should be performed minimally every month or as frequently needed, to prolong the longevity of the Q-Protrak in optimal conditions.
- Decontaminate the Q-Protrak as recommended in your established internal protocols, as well as the regulations and standards in virtue of the infection prevention and control procedures.

Customer-Provided Tools

- Clean and dry cloth
- Soft brush
- Pressure washer
- Cleaning solutions
- Phillips-head screwdriver #2
- Flat-head screwdriver
- Medium strength thread lock adhesive ()

Tested and Approved Cleaning Solutions

- Oxivir, 5% Hydrogen Peroxide with Peracetic Acid (AHP)
- Lavo 12, 10 000 ppm Sodium Hypochlorite
- TNT-100, 5% Quaternary Ammonium Compound
- Spectro-Sept, 5% Ethyl Alcohol
- Spectrol, 5% EDTA salt

© 2026 Technimount E.M.S. Holding Inc.

Maintenance Plan

1. Check the boxes upon completion of the « Safety Checks » section on page 36 and the « Condition-Based Maintenance » section on page 38, then add your comments and/or observations in the « Maintenance Log » section on page 39 if needed. In case of a non-conformity, immediately stop using the Q-Protrak and contact Technical Support at techsupport@technimount.com for a remedial action plan.
2. Keep records of your maintenance activities.

SAFETY CHECKS	CHECKED
Q-Protrak (Figure 24)	
- Visually inspect all the components of the Q-Protrak to ensure that the hardware is in good condition and there are no loose screws. • *If the hardware is not in good condition, replace it. Contact Technical Support if needed.* • If the screws are loose, there is a non-conformity.	☐
- Visually inspect all the components of the Q-Protrak to ensure there is no chemical attack. • *If there are traces of chemical attack, clean the mounting system. Refer to the « Condition-Based Maintenance » section on page 38 if needed.*	☐
- Pull/release the pull release knob of the Q-Protrak a few times to ensure proper functioning of the safety mechanism. • If a resistance is felt when pulling the knob and/or the knob stays stuck in the mechanism, there is a non-conformity.	☐
- Press/release the locking mechanism of the Q-Protrak's Micro Base a few times to ensure proper functioning of the quick-release mechanism. • *If the locking mechanism does not easily insert or a resistance in felt when it is pressed, there is a non-conformity.* • *If the locking mechanism does not retract easily or to a minimum of* 1/8 *in. (H) when it is release, there is a non-conformity.*	☐
- Press/release the quick-release button of the Q-Protrak's Micro Base a few times to ensure proper functioning of the safety mechanism. • *If the button does not easily insert or a resistance in felt when it is pressed, there is a non-conformity.* • *If the button does not retract easily when it is release, there is a non-conformity.*	☐
- Press/release the plungers of the Q-Protrak's Micro Base a few times to ensure their proper functioning. • *If the plungers do not easily insert or remain stuck when they are pressed, clean and lubricate the mounting system. Refer to the Micro Base User Manual*	☐
- Visually inspect stud fittings of the Q-Protrak to ensure that they is in good condition. • *If the stud fittings are not in good condition, there is a non-conformity.*	☐

© 2026 Technimount E.M.S. Holding Inc.

SAFETY CHECKS	CHECKED
- Move the load-bearing tracks up and down/back and forth and from side to side a few times to ensure that the installation is sturdy and correctly tightened. • *If the tracks move during the verification, tighten the track screws* using a Phillips-head screwdriver #2. *Refer to the « Install the Load-Bearing Tracks » section on page 31 if needed.* • *If the tracks still move after troubleshooting, there is a non-conformity.*	☐
- Install/remove the Q-Protrak on/from the load-bearing tracks a few times to ensure proper functioning of the pull release knob of the mounting system. • *If the knob cannot be pulled easily, a resistance is felt when doing so or stays stuck in the mechanism, there is a non-conformity.* • *If the Q-Protrak moves after correctly having been installed on the tracks, there is a non-conformity.*	☐
- Install/remove the medical device on/from the Q-Protrak a few times to ensure proper functioning of the quick release mechanism of the Q-Protrak's Micro Base. • *If the anti-rotation micro disc of the medical device's mounting bracket does not easily insert in the base and does not lock, and/or cannot be easily removed when using the quick-release button, there is a non-conformity.*	☐
- Look at the manufacturing label to ensure that specifications are still visible and that the mounting system has not passed its expected service life. Refer to the « Manufacturing Label » section on page 10 and the « Technical Specifications » section on page 15 if needed. • *If the estimated period of safe and reliable use has passed, there is a non-conformity.*	☐
- Look at the operation label to ensure that it is still visible on the Q-Protrak. Refer to the « Operation Label » section on page 11 and the « Technical Specifications » section on page 15 if needed. • *If the label is no longer visible and/or missing, there is a non-conformity.*	☐

© 2026 Technimount E.M.S. Holding Inc.

CONDITION-BASED MAINTENANCE	CHECKED

Clean the Q-Protrak, after you have completed the safety checks: ☐

1. Remove the excess dirt using a clean cloth, if needed.
2. Remove the contaminants using a pressure washer or as recommended in your established internal protocols and control procedures.
3. Clean using a cloth and cleaning solution.
4. Spot clean stains by applying the solution directly on the stain and let sit on the surface, if needed.

   NOTE : Avoid over saturation and ensure that the product **does not sit** on the surface of the Q-Protrak components longer than recommended by the cleaner's manufacturer.

5. Thoroughly rinse the solution with a clean cloth dampened with lukewarm water, then dry all the components using a clean cloth before returning to service.

Clean the Micro Base and mounting bracket, after you have completed the safety checks and condition-based maintenance of the Q-Protrak. Refer the User Manual of the base and bracket for the specific maintenance plans. ☐

Clean the load-bearing tracks, after you have completed the safety checks and condition-based maintenance of the Q-Protrak. Refer to the user documentation of the tracks and to your established internal protocols for the specific the maintenance plan. ☐

© 2026 Technimount E.M.S. Holding Inc.

MAINTENANCE LOG

Add your comments and/or observations, after you have completed the safety checks and Condition-Based Maintenance, if needed:

Maintenance plan completed on (dd/mm/yyyy): _____

Maintenance plan completed by: _____

© 2026 Technimount E.M.S. Holding Inc.

Illustrated Inspection Points

Figure 24 illustrates the inspection points of the Q-Protrak.

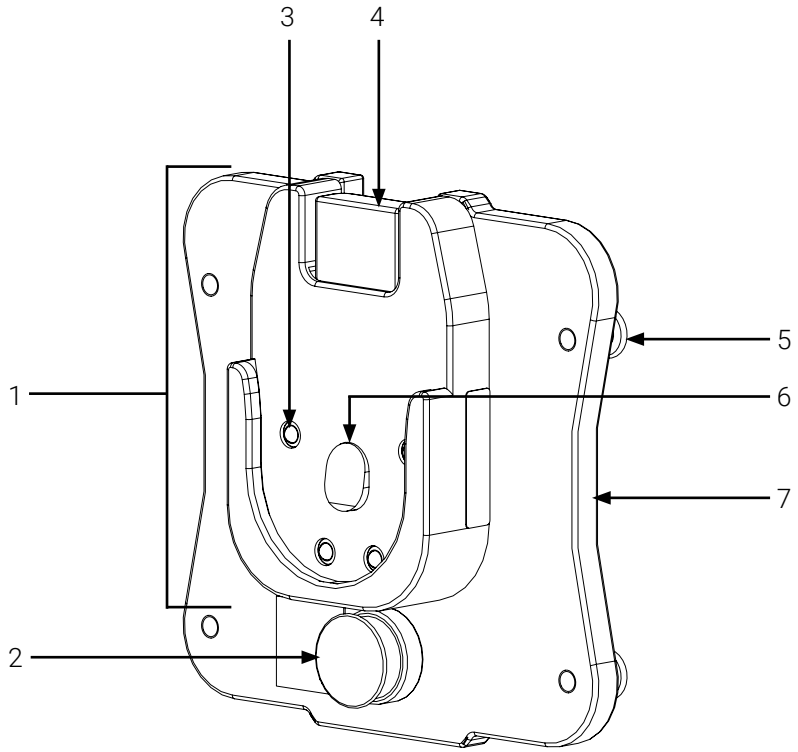

1. Micro Base
2. Pull release knob
3. Plungers (4X)
4. Quick-release button
5. Stud fitting (4X)
6. Locking mechanism
7. Adaptive plate

Figure 24: Q-Protrak illustrated inspection points

Annex V Replacement Parts/Kits



The content in this section is intended for personnel who have a, proficient or advanced level of competency. Refer to the « User Competency » section on page 5 if needed.

Technimount reserves the right to change part numbers and products without notice. Please contact Customer Service at customerservice@technimount.com to ensure product options and availability, or Technical Support at techsupport@technimount.com for replacement parts/kits or repair related issues.

REF. #	PART/KIT #	PART/KIT DESCRIPTION	REPLACEMENT PROCEDURE
Figure 24, #1	120-20-UN-510-FL	Micro Base	Refer to the « Micro Base Replacement Procedure » section on page 42
Figure 24	3500-10-QPR-FL	Q-Protrak – FL	N/A
N/A	N/A	MS33601 Load-bearing track	Refer to the « Load-Bearing Track Replacement Procedure » section on page 44

© 2026 Technimount E.M.S. Holding Inc.

Annex VI Micro Base Replacement Procedure

The content in this section is intended for personnel who have an advanced level of competency. Refer to the « User Competency » section on page 5 if needed.

WARNING – Risk of Injury

Always wear/use the appropriate Personal Protection Equipment (PPE) based on your established internal protocols (e.g., gloves, eyewear, etc.) during the installation.

Estimated Replacement Time

- 5 minutes

Required Part(s)

- Micro Base 120-20-UN-510-FL

Customer-Provided Tools

- Phillips-head screwdriver #2
- Medium strength thread lock adhesive ( )

Replacement Procedure

1. Unscrew the 6 screws located under the adaptive plate of the Q-Protrak to remove the Micro Base using a Phillips-head screwdriver #2 and set aside the screws momentarily (Figure 25). The Micro Base **will not be reused.** Refer to your established internal protocols and the environmental laws that apply to your jurisdiction for the proper disposal of the part.

(A) (B)

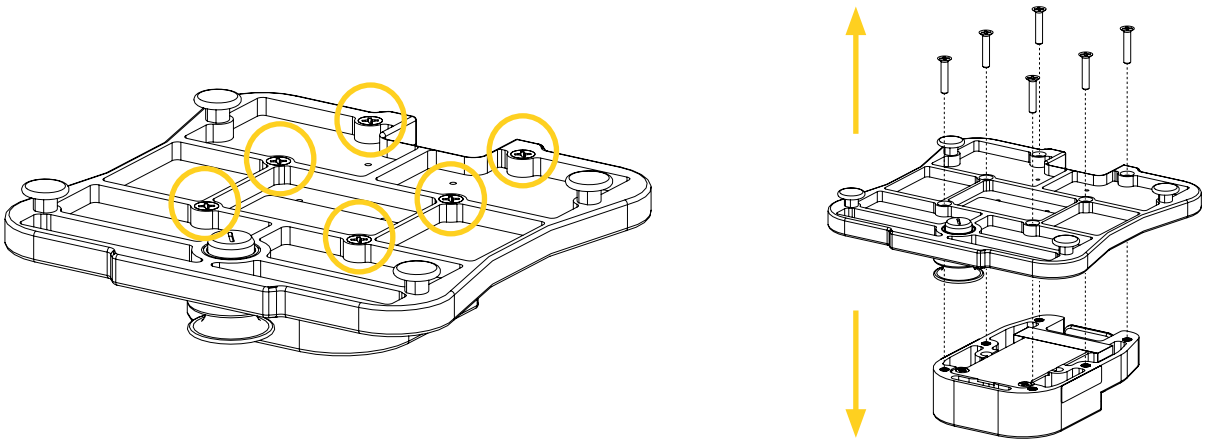

Figure 25: Removing the Micro Base

© 2026 Technimount E.M.S. Holding Inc.

2. Place and align the screw holes of the new Micro Base and adaptive plate, then tighten the sub-assembly reusing the six (6) screws coated with medium strength thread lock adhesive ( ) and a Phillips-head screwdriver #2 (Figure 26).

(A) (B)

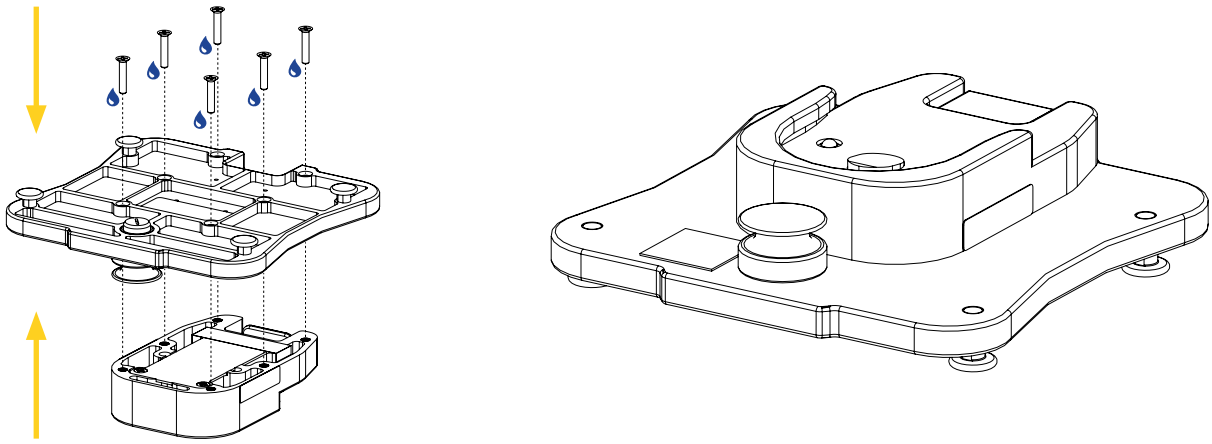

Figure 26: Installing the new Micro Base

3. Move the Micro Base back and forth and from side to side a few times to ensure it is properly installed and secured on the adaptive plate. If the base does not move during the verification, it is properly installed and secured.

The replacement of the Micro Base 120-20-UN-510-FL is complete.

© 2026 Technimount E.M.S. Holding Inc.

Annex VII Load-Bearing Track Replacement Procedure

The content in this section is intended for personnel who have an advanced level of competency. Refer to the « User Competency » section on page 5 if needed.

WARNING – Risk of Injury

Always wear/use the appropriate Personal Protection Equipment (PPE) based on your established internal protocols (e.g., gloves, eyewear, etc.) during the installation.

NOTE : The illustrations herein are for user-comprehension purposes and may differ from your actual configuration. The instructions apply to any compatible load-bearing tracks. Refer to the user documentation for the safety guidelines and safe use, if needed.

Estimated Replacement Time

- 10 minutes

Customer-Provided Tools and Parts

- MS33601 Load-bearing track (2X)
- SS 1/4-20 in., 100°, fully threaded Phillips flat head screws. The number of screws will depends on the length of your rails.

  NOTE : The length of the screws will depend on the depth of the installation surface.
- Phillips-head screwdriver #2
- Medium strength thread lock adhesive ( )

Replacement Procedure

1. Remove the medical device from the Q-Protrak. Refer to the « Removing the Medical Device from the Q-Protrak » section on page 27 if needed.
2. Remove the Q-Protrak from the load-bearing tracks. Refer to the « Removing the Q-Protrak from Load-Bearing Tracks » section on page 24 if needed.

© 2026 Technimount E.M.S. Holding Inc.

3. Unscrew and remove the load-bearing tracks using a Phillips-head screwdriver #2 (Figure 27). The screws and tracks **will not be reused**. Refer to your established internal protocols and the environmental laws that apply to your jurisdiction for the proper disposal of the part.

(A) (B)

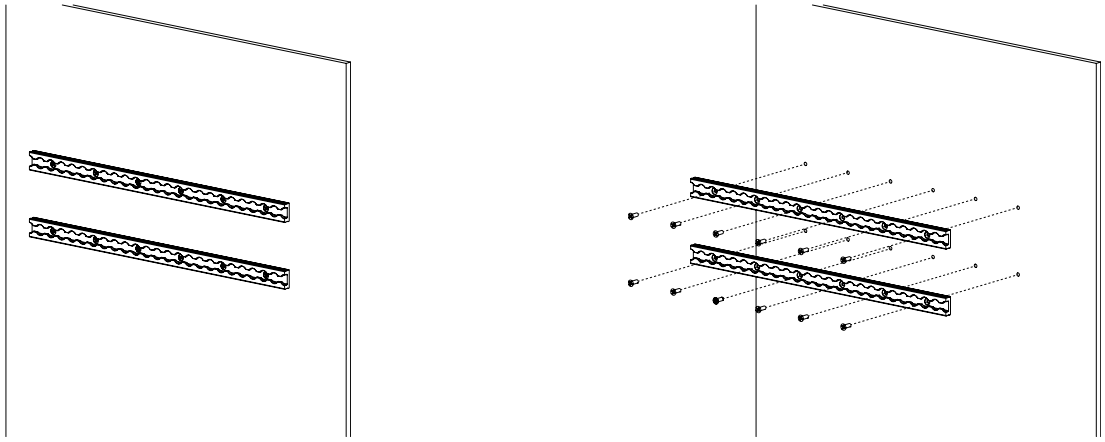

Figure 27: Removing the load-bearing tracks (vertical installation illustrated)

4. Align and install the tracks using SS 1/4-20 in., 100°, fully threaded Phillips flat head screws coated with medium strength thread lock adhesive ( ) and a Phillips-head screwdriver #2 (Figure 28).

(A) (B)

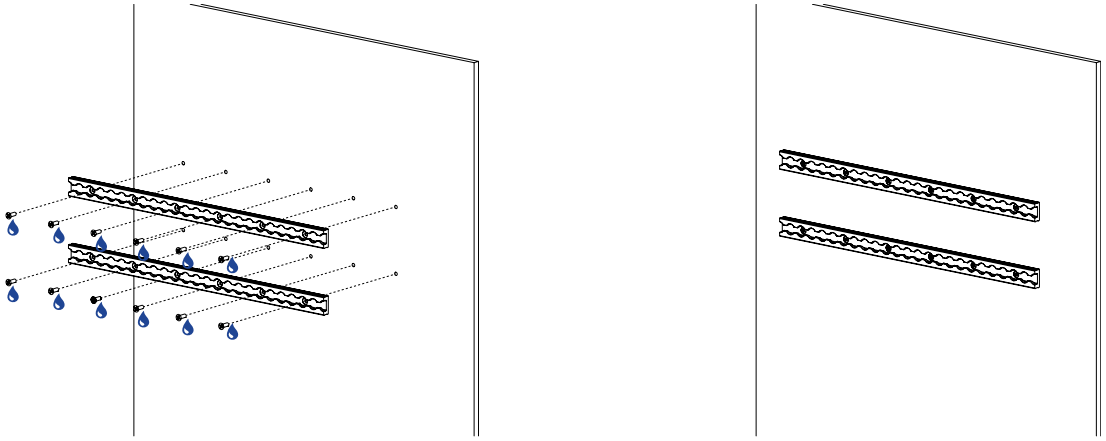

Figure 28: Installing the new load-bearing tracks (vertical installation illustrated)

5. Move the tracks up and down/back and forth and from side to side a few times to ensure that they are properly secured on the installation surface. If they do not move during the verification, they are properly secured.

The replacement of the MS33601 load-bearing tracks is complete.

© 2026 Technimount E.M.S. Holding Inc.

TECHNIMOUNT
EMS®

SAFETY AND FLEXIBILITY WHERE IT MATTERS MOST

© 2026 Technimount E.M.S. Holding Inc. | technimount.com