TECHNIMOUNT
MEDICAL®

PUMP CARRIER – 254

USER MANUAL

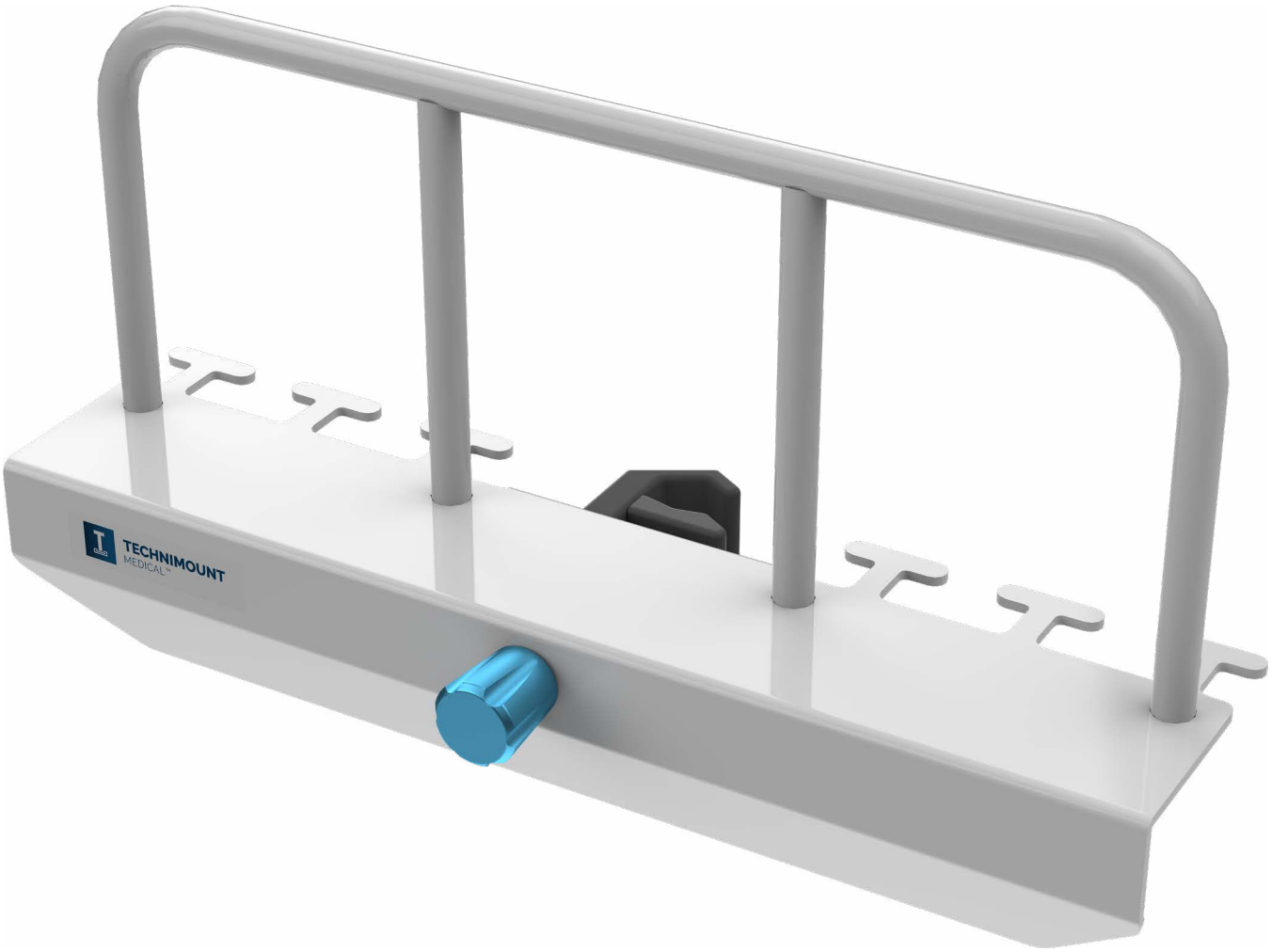

TECHNIMOUNT MEDICAL ISO 13485:2016

MAKING HEALTHCARE PRACTICES
MORE EFFICIENT

Copyrights

Copyright 2026 Technimount Medical Inc. is an affiliated company of Technologies CGC Inc. All Rights Reserved. No part of this publication may be reproduced, transmitted, transcribed, backed-up on a retrieval system, translated in any language, modified in any form or by any means, without the written permission of Technimount or its affiliate companies.

Trademarks

Product and medical device manufacturer names are Trademarks™ or Registered Trademarks® of their respective holders.

- Technimount EMS® is a registered trademark of Technologies CGC Inc.
- Spectrum IQ® and SIGMA Spectrum® are registered trademarks of Baxter.
- Oxivir® is a registered trademark of Diversey.
- Lavo® is a registered trademark of KIK Holdco Company, Inc.

For any issues with your Technimount product, its components, or for any technical questions during the installation, operation, or maintenance, please contact Technical Support at techsupport@technimount.com.

Contact Information

Technimount Medical Inc.

C/O: Regulatory Affairs

3770 Jean Marchand Street, Suite 100-B

Quebec (Quebec) G2C 1Y6

Canada

customerservice@technimount.com

techsupport@technimount.com

legal@technimount.com

www.technimount.com

T + 1 581 700-6583

SF + 1 888 521-0871 (North America)

Table of Contents

Copyrights ..... **ii**
Trademarks ..... **ii**
Contact Information ..... **ii**
1. General Mentions and Considerations **5**
1.1. Intended Use 5
1.2. User Competency 5
1.3. Warranties 6
1.3.1. Warranty Policy 6
1.3.2. Limited Warranty 6
1.3.3. International Warranty Clause 6
1.3.4. User Liability 6
1.4. Claims 7
1.4.1. Damaged or Defective Merchandise 7
1.4.2. Return Policy 7
1.4.3. Return Material Authorization (RMA) 8
1.4.4. Claim Process 8
2. General Safety Guidelines **9**
2.1. Symbols and Definitions 9
2.2. Labels 10
2.3. Safety Measures 11
3. Technical Specifications **14**
4. Orientation Illustrations **15**
5. Illustrated Parts **16**
6. Illustrated Dimensions **17**
7. Safety Mechanism **18**
8. Operate the Pump Carrier – 254 ..... **20**
8.1. Install the Pump Carrier – 254 on the IV Stand 20
8.2. Remove the Pump Carrier – 254 from the IV Stand 21
8.3. Adjusting the height of the Pump Carrier – 254 on the IV Stand 22
8.4. Install the Infusion Pump(s) on the Pump Carrier – 254 23
8.5. Remove the Infusion Pump(s) from the Pump Carrier – 254 24
Annex I Skills Assessment of the Clinical Staff **26**

© 2026 Technimount Medical Inc.

Annex II Unpack the Pump Carrier – 254 28
Annex III Install the Optional Accessories 29
..... Install the Power Bar on the Pump Carrier – 254 29
..... Estimated Installation Time 29
..... Required Parts 29
..... Customer-Provided Tools 29
..... Installation Procedure 30
Annex IV Permanently Lock the Pump Carrier – 254 on the IV Stand 33
..... Estimated Time of Procedure 33
..... Customer-Provided Tools 33
..... Locking Procedure 33
Annex V Unlock the Pump Carrier – 254 from the IV Stand 34
..... Estimated Time of Procedure 34
..... Customer-Provided Tools 34
..... Unlocking Procedure 34
Annex VI Maintenance 35
..... Maintenance Frequency 36
..... Customer-Provided Tools 36
..... Tested and Approved Cleaning Solutions 36
..... Maintenance Plan 37
..... Safety Checks 37
..... Condition-Based Maintenance 38
..... Maintenance Log 39
..... Illustrated Inspection Points 40
Annex VII Replacement Parts/Kits 41

© 2026 Technimount Medical Inc.

1. General Mentions and Considerations

This user manual includes detailed product information, standards and guidelines to assist the administrator/ manager/supervisor and biomedical technician (or equivalent) with the unpacking, assembling (when indicated), maintenance, training and skills assessment of the clinical personnel, as well as specific user-related information to safely and effectively operate the Pump Carrier – 254.

Please read the user manual thoroughly to fully assess, comprehend, then relay its content to clinical personnel during training, to warn them of any potential danger of its abuse, how to safely use the product and provide a safe environment for patients as well as themselves. Your established internal protocols should be updated to include the Technimount product(s) standards, guidelines, requirements and safety recommendations included within this documentation. The user manual should remain available to users when needed and relayed if the product is subsequently sold.

NOTE : Technimount continually seeks advancements in product design and quality. While the user manual contains the most updated product information available at the time of printing, it may contain minor differences from the current version, including image references. For more information, please contact Technical Support at techsupport@technimount.com.

NOTE : Technimount reserves the right to change part numbers and products without notice. Please contact Customer Service at customerservice@technimount.com to ensure product options and availability.

1.1. Intended Use

The Pump Carrier – 254 is a mounting system designed to aid trained clinical personnel secure and transport up to four (4) infusion pumps on IV stands in hospitals and clinics.

1.2. User Competency

To safely operate the Pump Carrier – 254, personnel must have the required skill level to comply with their function and level of interaction with the mounting system. Training should be given to clinical personnel prior to them using the Pump Carrier – 254. Refer to the « Skills Assessment of the Clinical Staff » section on page 26 to evaluate their competency.



Indicates who the content is intended for and the level of competency required. The definitions of the three (3) levels of competency are specified below.

- **Competent (trained clinical personnel):** Has received the required training, is sufficiently knowledgeable to safely operate the product and has passed the skills assessment (refer to the « Skills Assessment of the Clinical Staff » section on page 26).

  NOTE : Any member of the clinical personnel who has not received the required training and lacks the knowledge needed to safely operate the mounting system must not use the product.

- **Proficient (administrator/manager/supervisor):** Has in-depth knowledge and product comprehension, and is familiar with standards and guidelines. Skilled to train the clinical personnel on how to safely use the product.

© 2026 Technimount Medical Inc.

- **Advanced (biomedical technician or equivalent):** Has extensive mechanical experience. Skilled to perform the unpacking, assembly, safety checks and condition-based maintenance procedures as detailed herein, or the basic troubleshooting, upgrade and/or replacement procedures if applicable.

1.3. Warranties

1.3.1. Warranty Policy

This statement constitutes Technimount's entire warranty policy with regards to Technimount products. Technimount makes no other warranty or representation, neither expressed nor implied, except as stated herein. There is no warranty of merchantability or warranty of fitness for any particular purpose. Under no circumstances will Technimount be held liable hereunder for incidental or consequential damages, arising from or in any manner, related to sales or use of any such product.

Technimount Medical Inc. guarantees to the original "Purchaser" of the "Product" with which this "Limited warranty" is included, that the product will be free from "Defects" in workmanship and materials under normal use for a "Warranty period" of one (1) year from the product purchase date by the purchaser. During the warranty period, the product will be repaired or replaced according to the "Limited warranty" without charge to the purchaser for parts or labor. The parts and product may be repaired or replaced with new or refurbished parts or products. Herein this Limited Warranty, "Refurbished" means parts and products which have been returned to the factory, specifically. If the product is repaired or replaced within the warranty period, the greater of the remaining warranty period will apply, or three (3) months from the date of repair or replacement. If the product is repaired or replaced after the warranty period has expired, the warranty period for the repair or replacement will expire three (3) months after the repair or replacement date.

1.3.2. Limited Warranty

The limited warranty does not apply to normal wear that could result from normal use. It does not apply when the product or any of its components have been disassembled or repaired by someone not authorized by "Technimount". It does not cover repair or the replacement of any product or part thereof damaged by neglect, misuse, moisture, liquids, exposure to heat, accidents, abuse, and non-compliance with the instructions for installation and use provided with the product. It does not cover physical damage to the surface of the product. The decision to repair, replace or refuse the coverage is final and at the sole discretion of Technimount, without any compensation or obligation from Technimount. The product, defined as a "mounting system" or "pump carrier", is designed to secure and transport up to four (4) infusion pumps on IV stands in hospitals and clinics, and should only be used to fulfill this requirement. Any other use will void the warranty and Technimount shall not be held liable on any claim if the product has been modified or adapted for use.

1.3.3. International Warranty Clause

This warranty abides by the Canadian domestic policy. Warranty outside Canada may vary by country. Please contact Customer Service at customerservice@technimount.com for more information.

1.3.4. User Liability

The purchaser and administrator are responsible to validate regulations and standards for safety in their region, to comply with applicable safety regulations. Technimount is not responsible to inform the purchaser or the

© 2026 Technimount Medical Inc.

administrator of any applicable legislation for safety in their area.

The administrator is responsible for providing proper training to any personnel who will install, operate and perform maintenance on Technimount products.

1.4. Claims

1.4.1. Damaged or Defective Merchandise

ICC Regulations require that claims for damaged merchandise must be made with the carrier within fifteen (15) days of the reception date. **Do not accept** damaged merchandise unless such damage is noted on the delivery receipt at the time of reception. Upon prompt notification, Technimount will file a freight claim with the appropriate carrier for damages incurred. Claims are limited in amount to the actual replacement cost. If the claim has not been received by Technimount within the fifteen (15) day period following the date of delivery, or the damage was not noted on the delivery receipt at the time of receipt, the customer will be responsible for the full payment of the original invoice.

Claims for any short or broken merchandise must be made within thirty (30) days of invoicing. For details, refer to the « Claim Process » section on page 8 or contact Customer Service at customerservice@technimount.com.

1.4.2. Return Policy

Technimount products may be returned up to sixty (60) days from the reception date, if:

- The received product does not match what was originally ordered.
- The product does not meet the Technimount technical sheet specifications.
- The product is not compatible with the system on which it was intended to be installed on.

To return a Technimount product,

- A Return Material Authorization (RMA) must be requested and approved by Technimount prior to returning the product.
- Products must be returned undamaged and in its original packaging, appropriately identified with the approved RMA number. Returns will not be approved on a modified or damaged item.
- Charges may apply if the package received is damaged or items are missing.
- Purchaser is responsible for a restocking fee (refer to « Table 1: Restocking fees »).

Table 1: Restocking fees

RESTOCKING FEES	
Prior to thirty (30) days	10%
Prior to forty-five (45) days	25%
Prior to sixty (60) days	30%

For any manufacturing defect, refer to the conditions within the warranty policy or contact Customer Service at customerservice@technimount.com for additional information.

© 2026 Technimount Medical Inc.

1.4.3. Return Material Authorization (RMA)

The Technimount Customer Service department is responsible for all merchandise returns and will provide a Return Material Authorization (RMA) number, upon approval. The RMA must be printed and placed on the returned merchandise. Technimount reserves the right to charge shipping and restocking fees (refer to « Table 1: Restocking fees » on page 7) for the returned items. Special, modified, or discontinued items are not subject to returns.

1.4.4. Claim Process

Upon reception of the returned merchandise, a thorough inspection will be performed. If the merchandise is compliant with the return policy or it is found that the product is defective, Technimount will take corrective actions and close the claim. If, however, it is found that the product is not defective, but rather misused or abused, the product will not be covered by the warranty. Details of our findings and conclusions will be provided shortly thereafter. To submit a claim, contact Customer Service at customerservice@technimount.com to obtain a Return Material Authorization (RMA) form and return instructions.

© 2026 Technimount Medical Inc.

2. General Safety Guidelines



The content in this section is intended for personnel who have a competent, proficient or advanced level of competency. Refer to the « User Competency » section on page 5 if needed.

Pictograms, safety symbols and labels are used to alert the user to a potentially hazardous situation, which, if not avoided, may endanger the patients or the clinical personnel, and/or damage the product. This includes the special care necessary for the safe and effective use of the Technimount product to avoid damage that may occur from use or misuse.

The terms "Warning" and "Caution" herein carry special meaning and should be carefully reviewed before reading the « Safety Measures » section on page 11.

WARNING – Indicates a hazardous situation that, if not avoided, could result in death or serious injury, and/or damage the product.

CAUTION – Indicates a hazardous situation that, if not avoided, could result in minor or moderate injury, and/or damage the product.

2.1. Symbols and Definitions



WARNING – Risk of Injury

Indicates when a misuse of the Technimount product could result in injuries to the patients or clinical personnel, and/or damage to the product.



CAUTION – Safe Practice

Alerts the reader to pay special attention to the recommendations and methods outlining how to safely operate the product to minimize risks to the patients, clinical personnel, and/or to the product.



CAUTION – Safe Handling and Operation

Alerts the reader to pay special attention to the recommendations for safe use of the product, and of potentially hazardous situations that could result in minor injuries to the patients or clinical personnel. This includes the special care necessary for the safe and effective use of the product to avoid damage that may occur from use or misuse.



CAUTION – Safe Working Load (SWL)/Load Balance

Indicates the maximum charge for a safe use of the product.



CAUTION – Follow Instructions for Use

Call for action. Reminds the reader to consult the user manual for information.

© 2026 Technimount Medical Inc.

2.2. Labels

Labelling on the surface of the Technimount product, quickly identify potential risks and provides information to the user. A manufacturing label, including the serial numbers and the safe working load specifications (Figure 1), can be seen on the Technimount product.

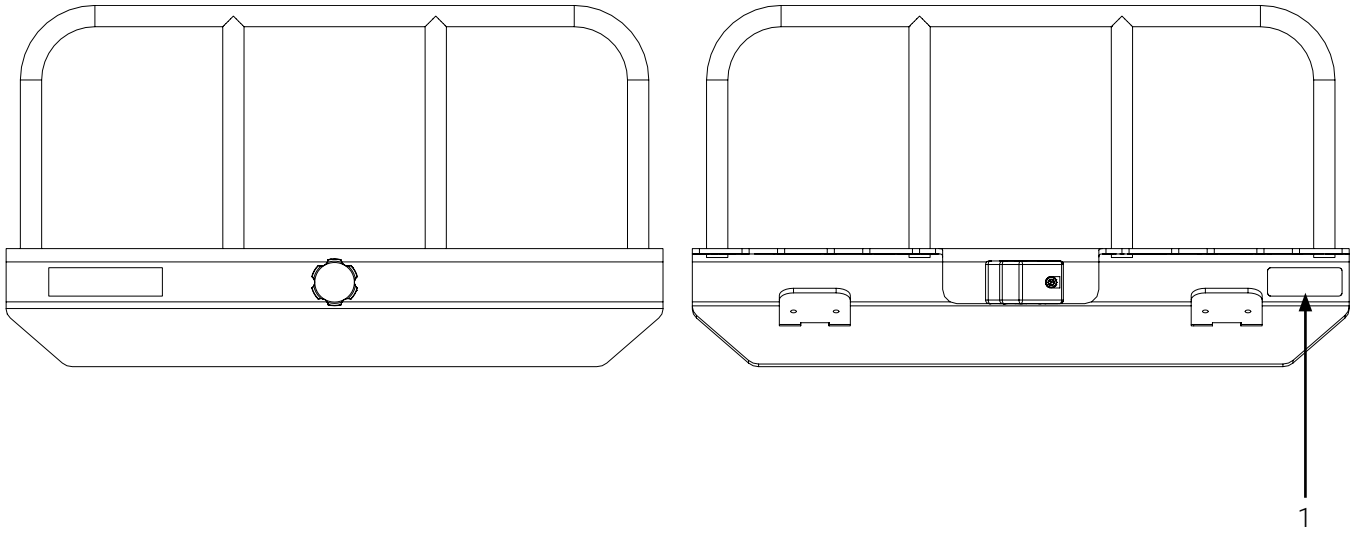

1. Manufacturing label

Figure 1: Location of the manufacturing label (back of the Pump Carrier – 254)

© 2026 Technimount Medical Inc.

2.3. Safety Measures

Carefully read all the safety measures herein before operating the Technimount product, and always abide by all the safety guidelines identified within this document.

Specific safety measures relating to the safety checks and the conditioned-based maintenance, intended for personnel who have an advanced level of competency, can be found in the « Maintenance » section on page 35.

WARNING – Unauthorized Systems

- **Under no circumstances** should the Pump Carrier – 254 be installed on rails.
- The Pump Carrier – 254 was specifically engineered to be used with the compatible infusion pumps and IV stands with poles between 19 mm – 32 mm D (0.75 in. – 1.25 in. D). Using any other pump/IV stand may cause the equipment to fall, operate unpredictably, or fail, resulting in serious injury to the patients or to the clinical personnel.
- The Pump Carrier – 254 was engineered and tested exclusively for use with specific authorized and compatible Technimount components/systems. Using any unauthorized and/or incompatible components/systems may cause the equipment to fall, operate unpredictably, or fail, resulting in serious injury to the patients or to the clinical personnel.
- Technimount assumes no responsibility for any damage, malfunction, or injury arising from use of unauthorized or incompatible medical devices and systems. Using any unauthorized and/or incompatible device/system may result in non-compliance with the applicable safety standards and will immediately void all warranties and liability coverage.
- Technimount products are intended for use only within their defined applications. Refer to the « Technical Specifications » section on page 14.
- Regulations and standards for safety are the sole responsibility of the end user. Ensure that your established internal protocols are updated and meet the technical specifications requirements herein (refer to the « Technical Specifications » section on page 14), as well as the local and regional compliance requirements before use.

WARNING – Proper Installation

- Technimount assumes no responsibility for any damage, malfunction, or injury arising from improper installations and/or using incompatible medical devices/systems that haven't been inspected and/or approved according to the herein requirements.
- Follow the installation instructions as detailed in the « Install the Optional Accessories » section on page 29, for a safe and reliable installation of the optional parts and to avoid risks that may cause the equipment to fall, operate unpredictably, or fail, resulting in serious injury to the patients or to the clinical personnel.

© 2026 Technimount Medical Inc.

WARNING – Risk of Injury

- **Do not use** the Pump Carrier – 254 for air and/or ground emergency medical services and critical care transport.
- **Do not use** the Pump Carrier – 254 if there are any loose or missing screws, to avoid risks that may cause damage or the equipment to fall or operate unpredictably, resulting in serious injury to the patients or to the clinical personnel.
- **Do not lean on and/or use** the Pump Carrier – 254 as an armrest when it is installed on the IV stand, to avoid risks that may cause damage or the equipment to fall or operate unpredictably, resulting in serious injury to the patients or to the clinical personnel.
- Always **keep fingers/hands away** from the clamp jaw when installing the Pump Carrier – 254 on the IV stand, to avoid risks of pinching.
- Immediately stop using the Pump Carrier – 254 if any serious incident occurs and inform authorized personnel, to contact the Technical Support at techsupport@technimount.com for a remedial action plan and to report the incident to the applicable regulatory agency.

CAUTION – Safe Handling and Operation

- **Do not overtighten** the clamp jaw during installation of the Pump Carrier – 254 on the IV stand. Applying excessive force may cause mechanical damage and reduce the expected service life of the product.
- Always ensure that the Pump Carrier – 254 is correctly installed on the pole before moving the IV stand, to avoid risks that may cause damage or the equipment to fall or operate unpredictably, resulting in serious injury to the patients or to the clinical personnel.
- Always wait until the IV stand is immobilized before installing/removing the infusion pumps in/from the Pump Carrier – 254, to avoid risks that may cause damage or the equipment to fall or operate unpredictably, resulting in serious injury to the patients or to the clinical personnel.
- Always ensure that the infusion pumps are correctly installed on the Pump Carrier – 254 before moving the IV stand, to avoid risks that may cause damage or the equipment to fall or operate unpredictably, resulting in serious injury to the patients or to the clinical personnel.
- Always pay close attention **not to wedge** the power cords or tubing during the installation/ removal of the Pump Carrier – 254 on/from the IV stand and/or the infusion pumps on/from the Pump Carrier – 254.

CAUTION – Safe Practice

- Always pay close attention to the safety mechanism of the Pump Carrier – 254, to avoid risks that may cause damage or the equipment to fall or operate unpredictably, resulting in serious injury to the patients or to the clinical personnel. Follow the recommended maintenance plan and its guidelines, as described in this user manual.
- Always practice safely operating the Pump Carrier – 254 until the manipulations have been perfected, before use with patients. Improper use of the mounting system may cause damage or the equipment to fall or operate unpredictably, resulting in serious injury to the patients or to the clinical personnel.

© 2026 Technimount Medical Inc.



CAUTION – Safe Working Load (SWL)/Load Balance

- **Do not overload or exceed** the total Safe Working Load (SWL) of the Pump Carrier – 254, to avoid tipping incidents or risks of collapsing. Refer to the « Technical Specifications » section on page 14 for the SWL.
- The Safe Working Load (SWL) of the Pump Carrier – 254 **does not override** the maximum load capacity of another Technimount product or system, neither those of the medical devices and/or medical equipment accessories that could be placed in bags and drawers for example. To comply with the SWL specification, the entire configuration should be taken into account. Refer to the user documentation of each product applicable to your specific configuration for specifications.
- **Do not install** the Pump Carrier – 254 too high on the IV stand, to avoid risks that may cause tipping, resulting in serious injury to the patients or to the clinical personnel. The center of gravity will change, depending on the height of installation and of your IV stand, therefore ensure that the IV stand is stable, regardless of the height of the installation. Refer to the user documentation of the IV stand and to your established internal protocols if needed.



CAUTION – Follow the Instruction for Use

Always refer to your established internal protocols, as well as read and abide by the safety guidelines and instructions provided in the user documentation of the Pump Carrier – 254, the IV stand and the infusion pump.

© 2026 Technimount Medical Inc.

3. Technical Specifications



The content in this section is intended for personnel who have a competent, proficient or advanced level of competency. Refer to the « User Competency » section on page 5 if needed.

Product Name	Pump Carrier – 254
Description	Mounting system specifically designed to secure and transport up to four (4) infusion pumps on IV stands in hospitals and clinics
Product Code	PCH254-P6-22
Operating Environment	Hospitals/Clinics
Compliance	The applicable sections, tested in compliance with IEC 60601-1: 2005 + A1: 2012 + A2: 2020 (Ed. 3.2)
Expected Service Life	5 years
Compatible Mounting System	Technimount Medical and generic IV stands with pole diameters between 19 mm – 32 mm (0.75 in. – 1.25 in.)
Compatible Medical Devices	- Baxter SIGMA Spectrum Infusion Pump - Baxter Spectrum IQ Infusion System - Infusion pumps equipped with a rear pole clamp
Dimensions (W X D X H)	587.4 mm (23.1 in.) W X 227.7 mm (9 in.) D X 323.13 mm (12.7 in.) H
Weight	- 2.7 kg (5.9 lb), w/o optional power bar - 3.5 kg (7.7 lb), with optional power bar
Composition	Aluminum
Total Safe Working Load (SWL)	7.9 kg (17.5 lb)
Operating Temperature	- 35° C to 45° C (- 31° F to 113° F)
Tested and Approved Cleaning Solutions	- Oxivir, 5% Hydrogen Peroxide with Peracetic Acid (AHP) - Lavo 12, 10 000 ppm Sodium Hypochlorite - TNT-100, 5% Quaternary Ammonium Compound - Spectro-Sept, 5% Ethyl Alcohol - Spectrol, 5% EDTA salt
Options	- 6-outlet, medical-grade power bar – 906-00-KT - 4-outlet, medical-grade power bar – 904-00-KT

© 2026 Technimount Medical Inc.

4. Orientation Illustrations

The content in this section is intended for personnel who have a competent, proficient or advanced level of competency. Refer to the « User Competency » section on page 5 if needed.

The orientations referenced herein are from the clinical personnel standpoint, when facing the Pump Carrier – 254 (Figure 2).

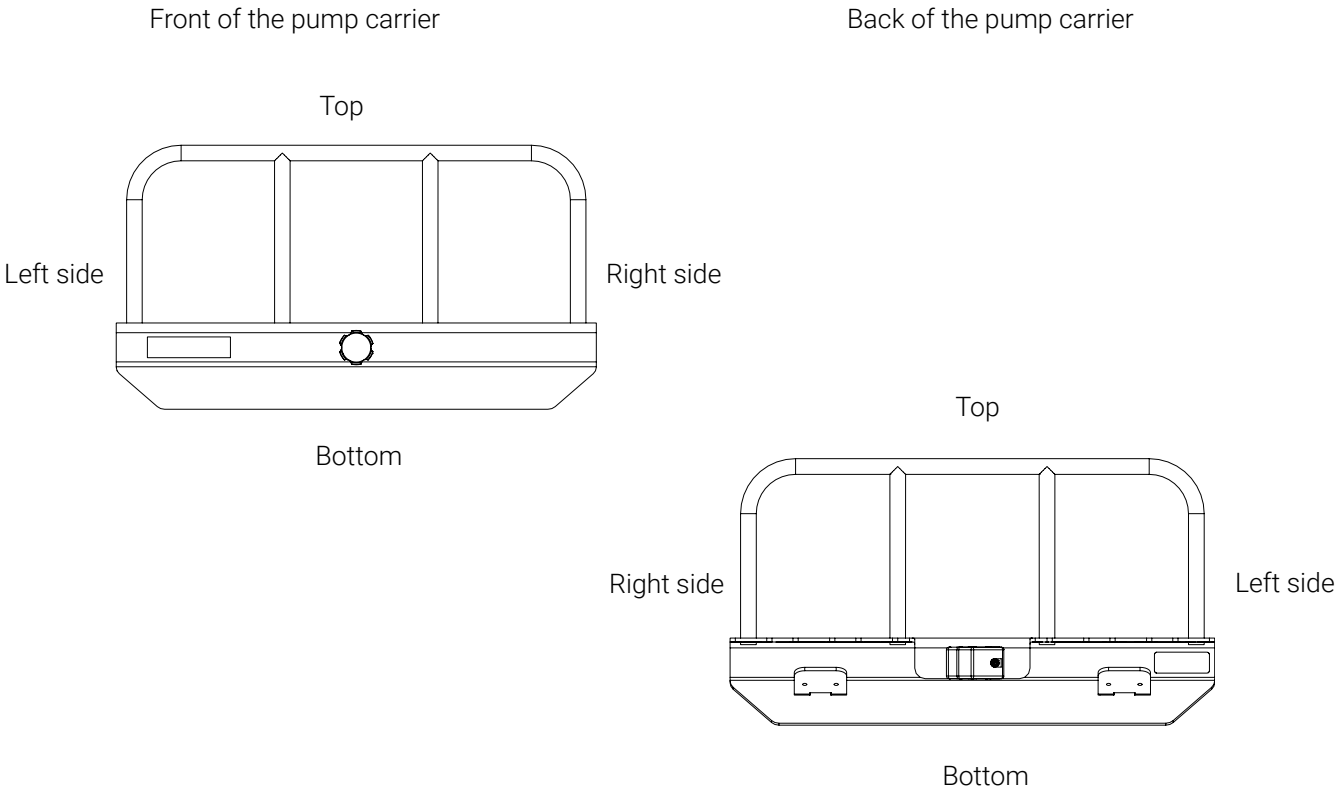

Figure 2: Pump Carrier – 254 orientation illustration

5. Illustrated Parts

The content in this section is intended for personnel who have a competent, proficient or advanced level of competency. Refer to the « User Competency » section on page 5 if needed.

Figure 3 illustrates the main components of the Pump Carrier – 254.

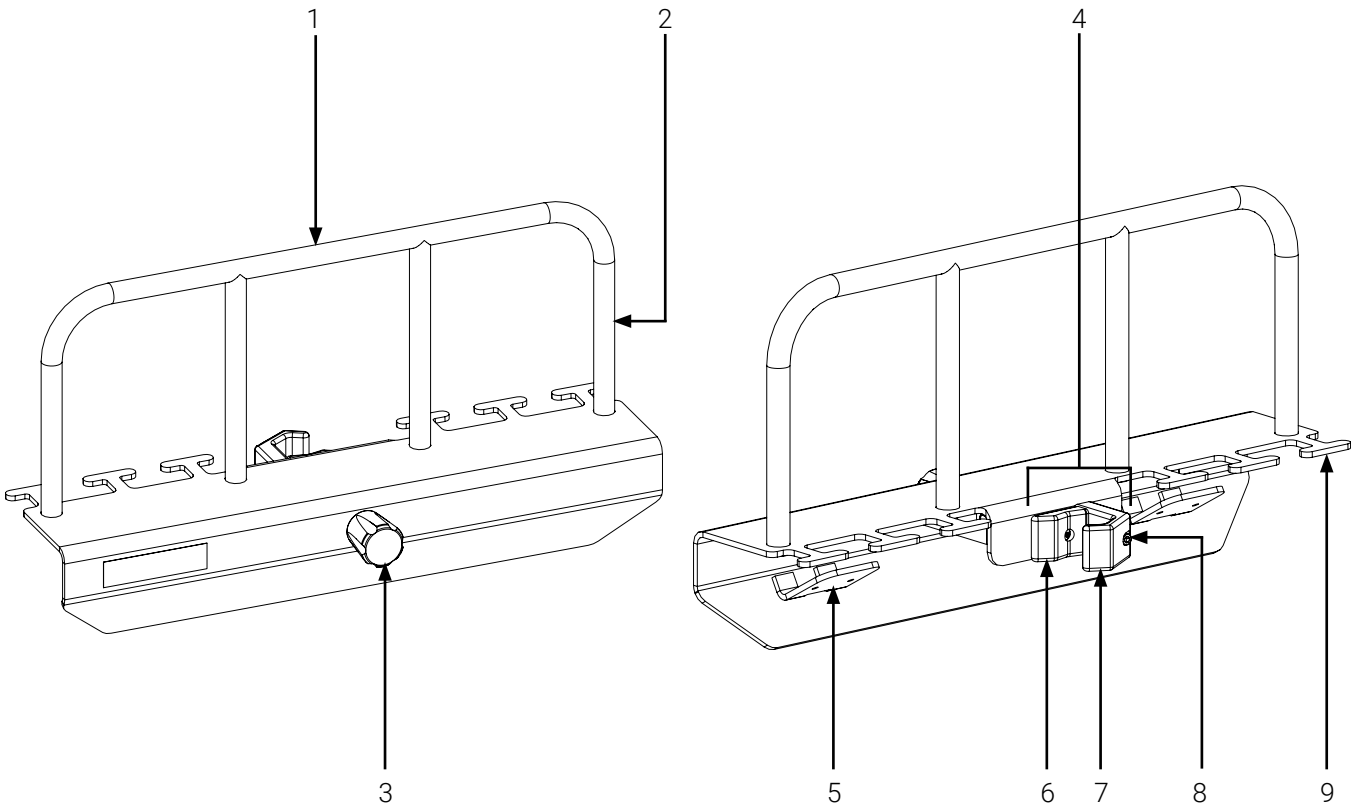

1. Top handle
2. Vertical pole for pump installation (4X)
3. C-clamp knob
4. C-clamp
5. Mounting plate (optional power bar; 2X)
6. Fixed jaw (c-clamp)
7. Adjustable jaw (c-clamp)
8. Locking screw
9. Cable management hook (6X)

Figure 3: Pump Carrier – 254 components

© 2026 Technimount Medical Inc.

6. Illustrated Dimensions

The content in this section is intended for personnel who have a competent, proficient or advanced level of competency. Refer to the « User Competency » section on page 5 if needed.

Figure 4 illustrates the dimensions of the Pump Carrier – 254.

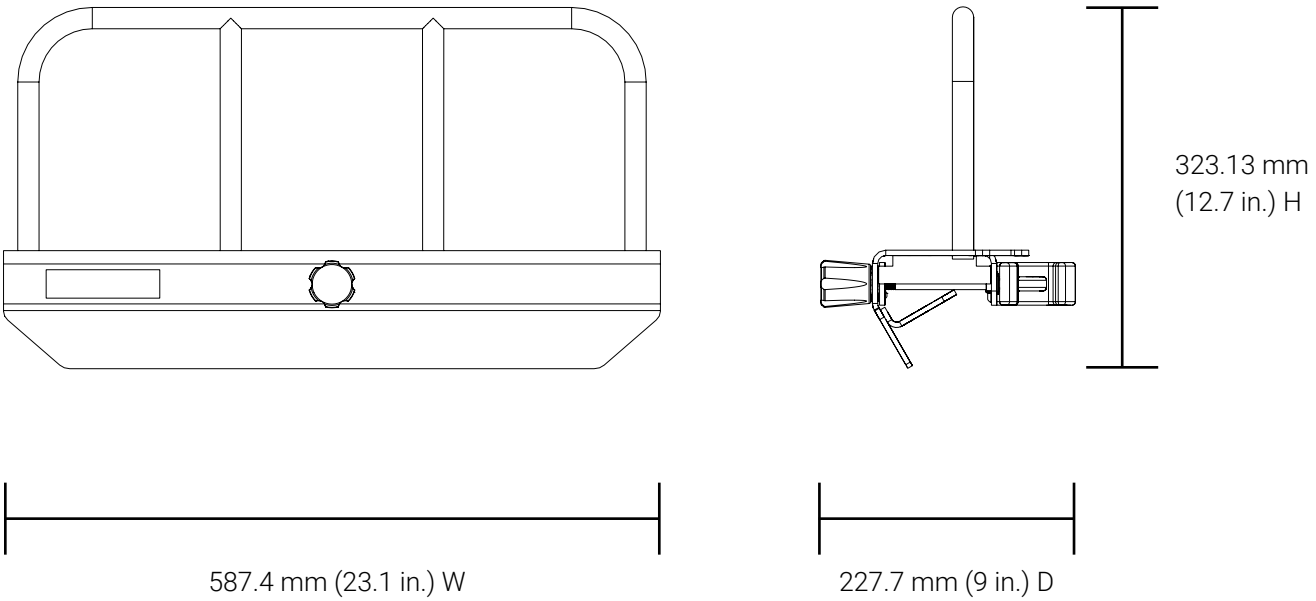

Figure 4: Pump Carrier – 254 dimensions

© 2026 Technimount Medical Inc.

7. Safety Mechanism

The content in this section is intended for personnel who have a competent, proficient or advanced level of competency. Refer to the « User Competency » section on page 5 if needed.

The safety mechanism of the Pump Carrier – 254 is composed of a c-clamp (Figure 5A). The threaded-stud knob actions the adjustable jaw and provides a secure grip to hold the Pump Carrier – 254 on IV stands with pole diameters between 19 mm – 32 mm (0.75 in. – 1.25 in.). Optionally, a locking screw located at the back of the c-clamp can be tightened to permanently lock the mounting system on the pole (Figure 5B). Refer to the « Install the Optional Accessories » section on page 29 if needed.

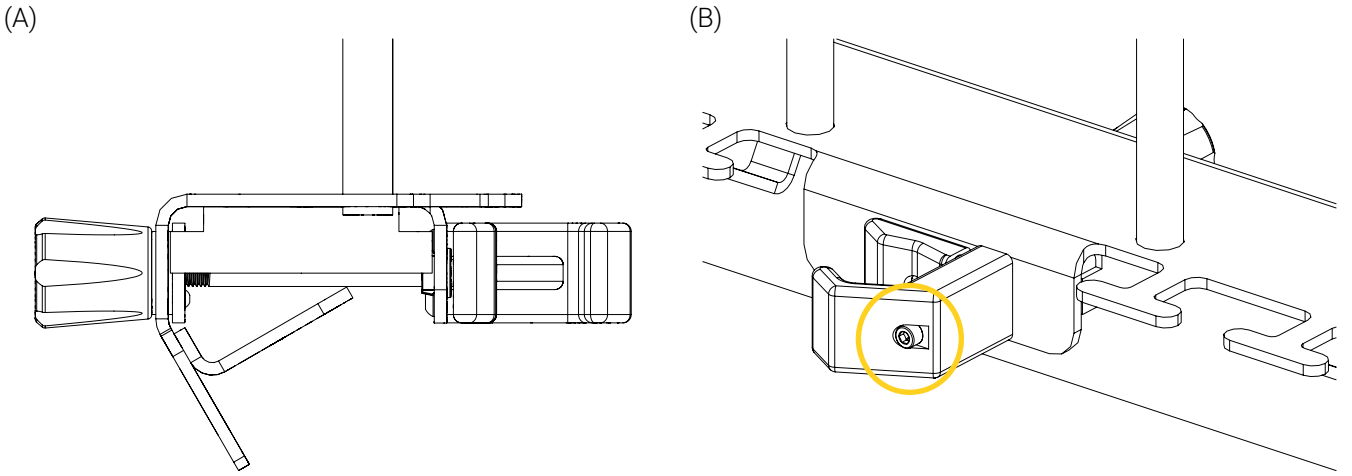

Figure 5: C-Clamp

The safety mechanism activates when the c-clamp knob is turned clockwise until the adjustable jaw reaches its maximum grip on the pole, without over-tightening. When firmly grasped, the infusion pumps can safely be installed on the Pump Carrier – 254 (Figure 6). The safety mechanism deactivates when the c-clamp knob is turned counterclockwise until the adjustable jaw releases pressure on the pole. Each turn of the c-clamp knob retracts the jaw providing the necessary opening for the removal of the Pump Carrier – 254 from the IV stand (Figure 7).

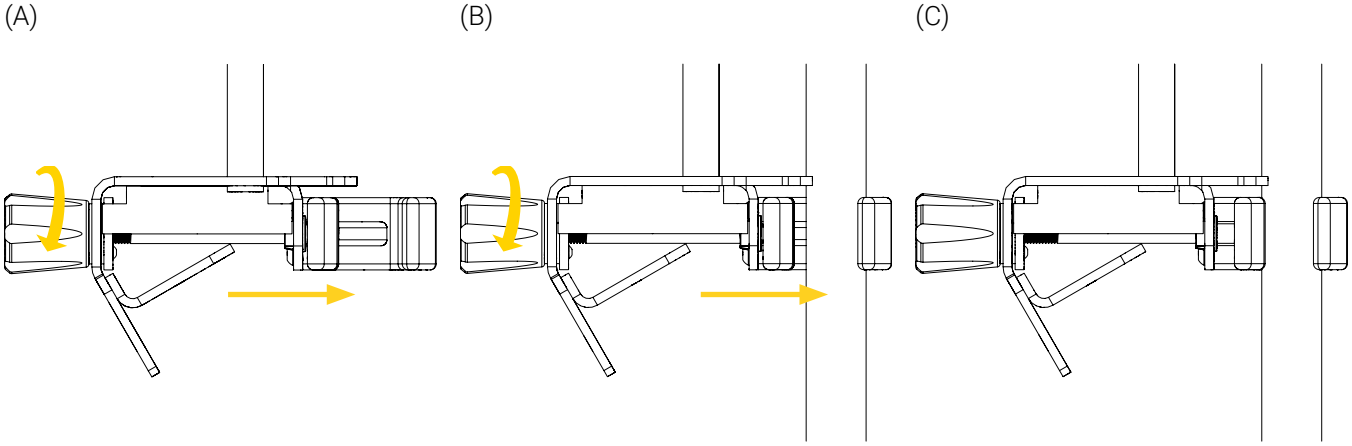

Figure 6: Activating the safety mechanism of the Pump Carrier – 254

© 2026 Technimount Medical Inc.

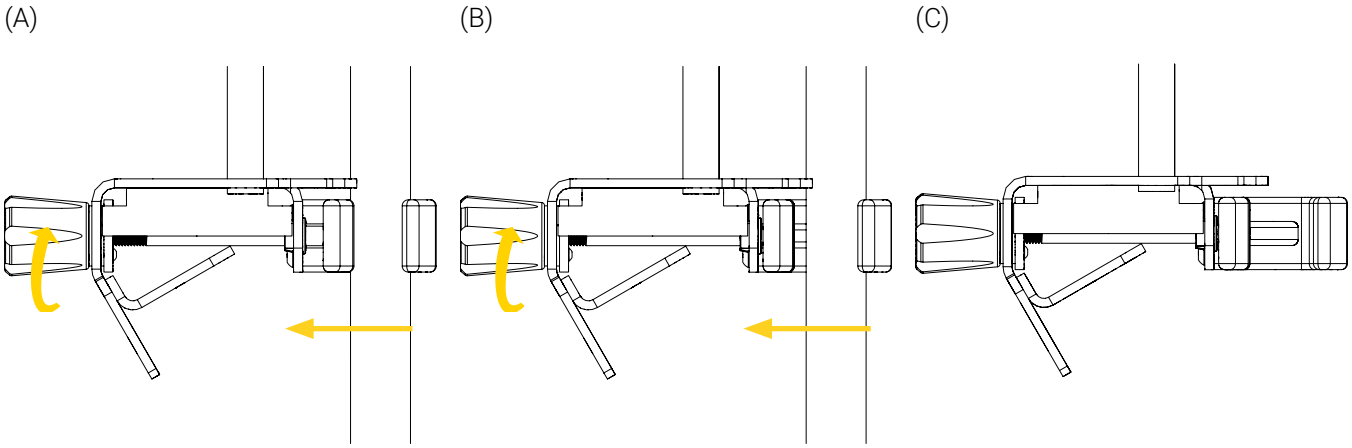

Figure 7: Deactivating the safety mechanism of the Pump Carrier – 254

© 2026 Technimount Medical Inc.

8. Operate the Pump Carrier – 254

The content in this section is intended for personnel who have a competent, proficient or advanced level of competency. Refer to the « User Competency » section on page 5 if needed.

NOTE : The illustrations herein are for user-comprehension purposes and may differ from your actual configuration. The instructions apply to any compatible IV stand and infusion pump. Refer to their user documentation if needed.

NOTE : The locking screw located at the back of the Pump Carrier – 254 will have to be loosened using a $^{3}/_{16}$ in. hex key to open/close the clamp jaw using the c-clamp knob. Refer to authorized personnel and to your established internal protocols if needed.

8.1. Install the Pump Carrier – 254 on the IV Stand

1. Disconnect the infusion pump from the power bar, then unwind the power cord from the cable management hook located behind the mounting system, if needed.
2. Turn the c-clamp knob located at the front of the Pump Carrier – 254 counterclockwise until the clamp jaw is opened (Figure 8). The number of turns and width of the opening will depend on the diameter of your IV stand's pole.

(A) (B)

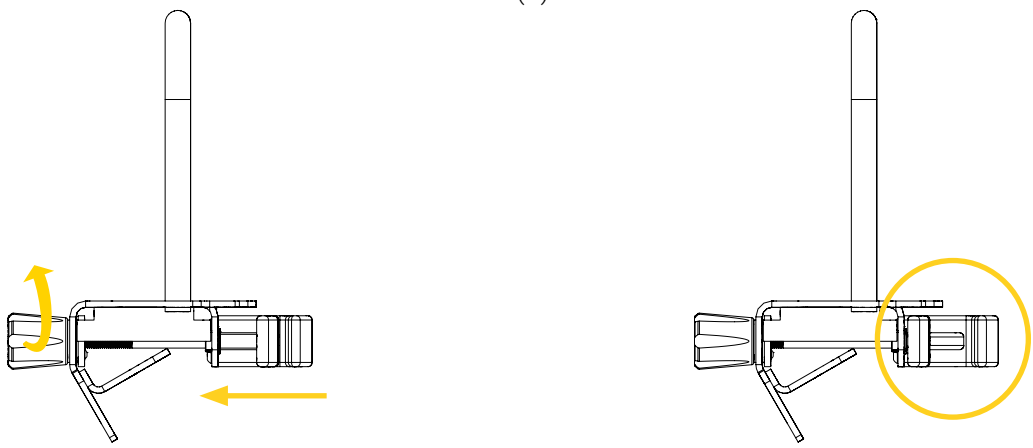

Figure 8: Opening the clamp jaw

© 2026 Technimount Medical Inc.

3. Align and hook the clamp jaw on the pole at the desired height using the top handle (Figure 9A), then turn the c-clamp knob clockwise (Figure 9B) until the clamp jaw firmly grasps the pole (Figure 9C).

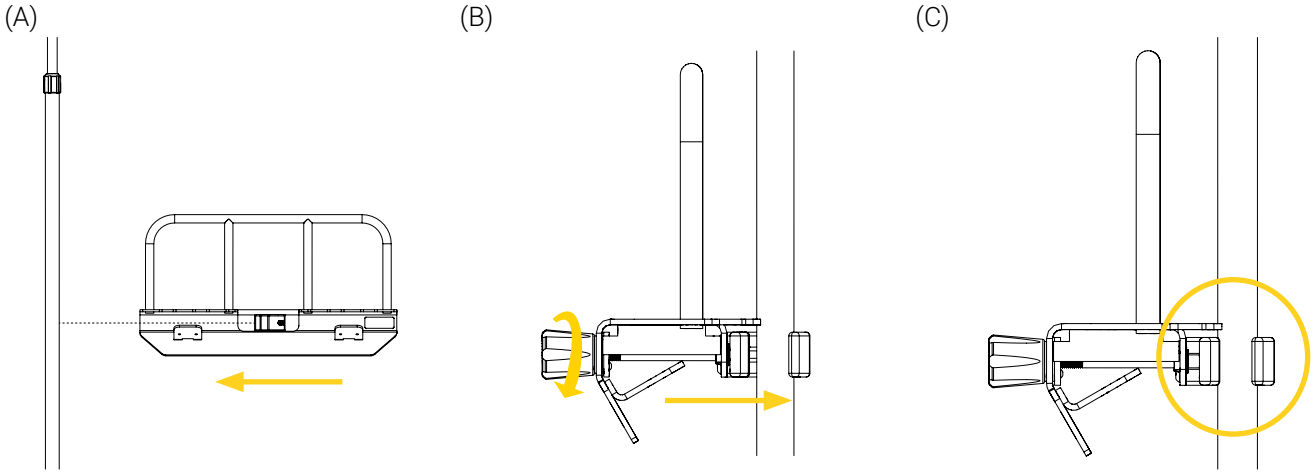

Figure 9: Installing the Pump Carrier – 254 on the IV stand

4. Move the mounting system up and down and from side to side a few times to ensure it is firmly attached on the IV stand. If the pump carrier does not move during the verification, it is firmly attached.

The installation of the Pump Carrier – 254 on the IV stand is complete.

8.2. Remove the Pump Carrier – 254 from the IV Stand

1. Hold the top handle of the Pump Carrier – 254, then turn the c-clamp knob located at the front of the mounting system counterclockwise (Figure 10A) until the clamp jaw is opened (Figure 10B). The number of turns and width of the opening will depend on the diameter of your IV stand's pole.
2. Remove the Pump Carrier – 254 from the IV stand (Figure 10C).

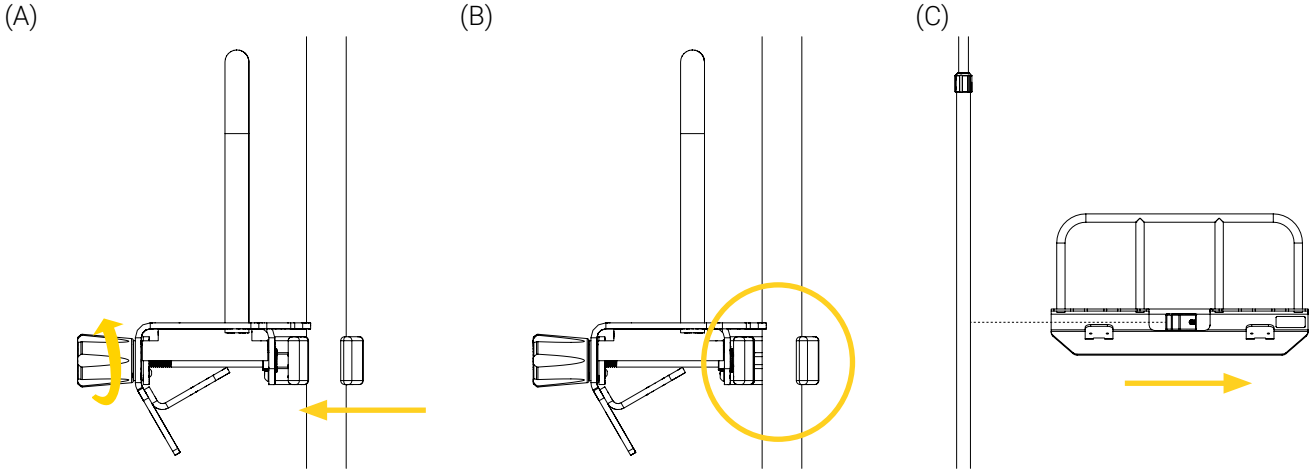

Figure 10: Removing the Pump Carrier – 254 from the IV stand

© 2026 Technimount Medical Inc.

3. Set the mounting system aside on a clean surface, or place it in its dedicated storage space. Refer to your established internal protocols if needed.

The removal of the Pump Carrier – 254 from the IV stand is complete.

8.3. Adjusting the height of the Pump Carrier – 254 on the IV Stand

1. Hold the top handle of the Pump Carrier – 254, then turn the c-clamp knob located at the front of the mounting system counterclockwise until the clamp jaw is opened (Figure 11). The number of turns and width of the opening will depend on the diameter of your IV stand's pole.

(A) (B)

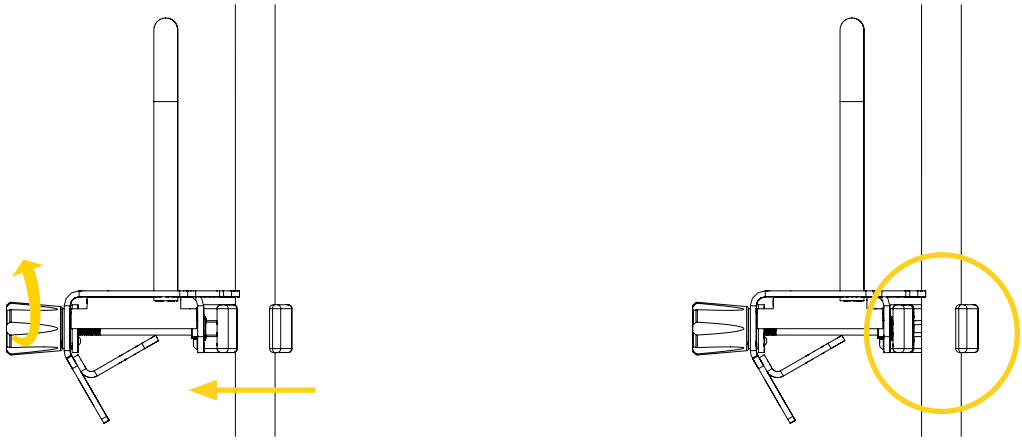

Figure 11: Opening the clamp jaw

2. Lift (Figure 12A) or lower (Figure 12B) the Pump Carrier – 254 on the IV stand to the desired height, then turn the c-clamp knob clockwise until the clamp jaw firmly grasps the pole (Figure 12C).

NOTE : Ensure the IV stand is stable in the new position. Refer to the Risk of Injury warning in the « Risk of Injury » section on page 12 if needed.

(A) (B) (C)

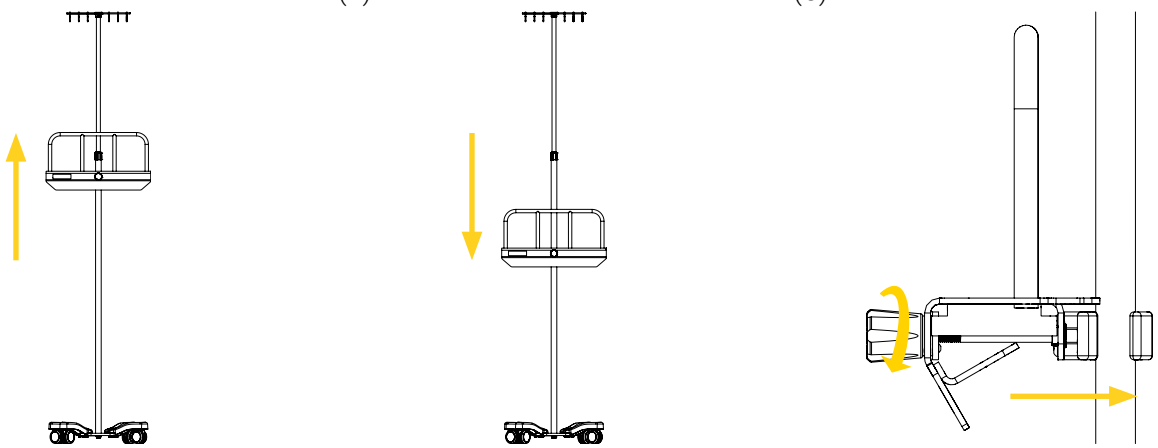

Figure 12: Adjusting the height of the Pump Carrier – 254 on the IV stand

© 2026 Technimount Medical Inc.

3. Move the mounting system up and down and from side to side a few times to ensure it is firmly attached on the pole. If the pump carrier does not move during the verification, it is firmly attached.

The height adjustment of the Pump Carrier – 254 on the IV stand is complete.

8.4. Install the Infusion Pump(s) on the Pump Carrier – 254

1. Turn the speed knob of the double rotating IV Pole Clamp located at the back of the infusion pump until the clamp jaw is open, minimally 1 in. W. Refer to the infusion pump's user documentation and/or to your established internal protocols if needed.
2. Align and hook the clamp jaw on the chosen vertical pole of the Pump Carrier – 254 (Figure 13A), then turn the speed knob of the double rotating IV Pole Clamp (Figure 13B) until the clamp jaw firmly grasps the pole (Figure 13C).

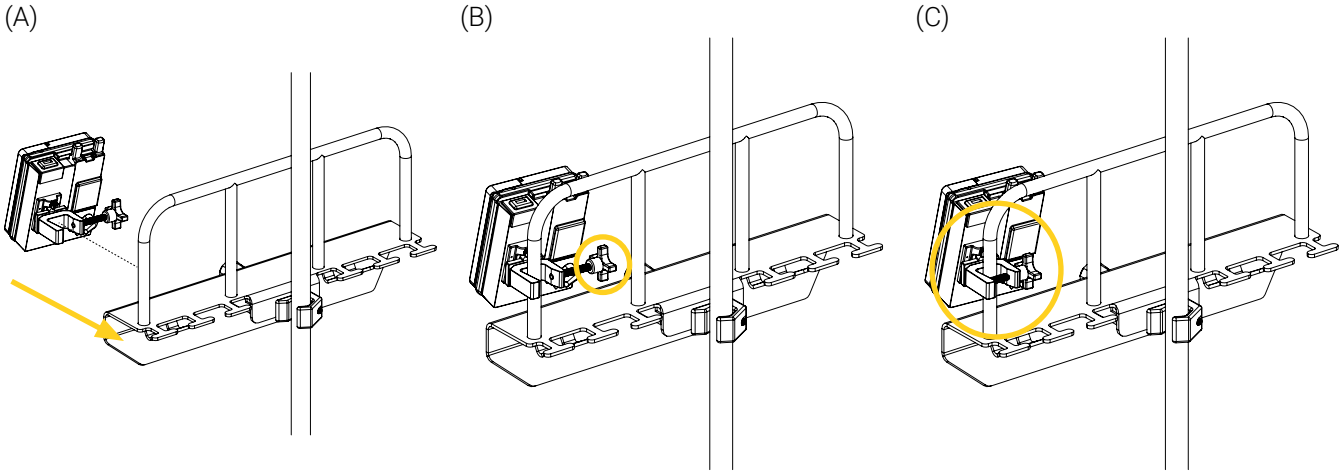

Figure 13: Installing the infusion pump(s) on the Pump Carrier – 254

3. Move the infusion pump up and down and from side to side a few times to ensure it is firmly attached on the pole. If the pump does not move during the verification, it is firmly attached.

© 2026 Technimount Medical Inc.

4. If your pump carrier has an optional power bar, connect the infusion pump in an outlet (Figure 14A), then pass and/or wind the power cord(s) on the cable management hook(s) located behind the mounting system.
5. Repeat steps 1 to 4 to install up to four (4) infusion pumps (Figure 14B).

(A) (B)

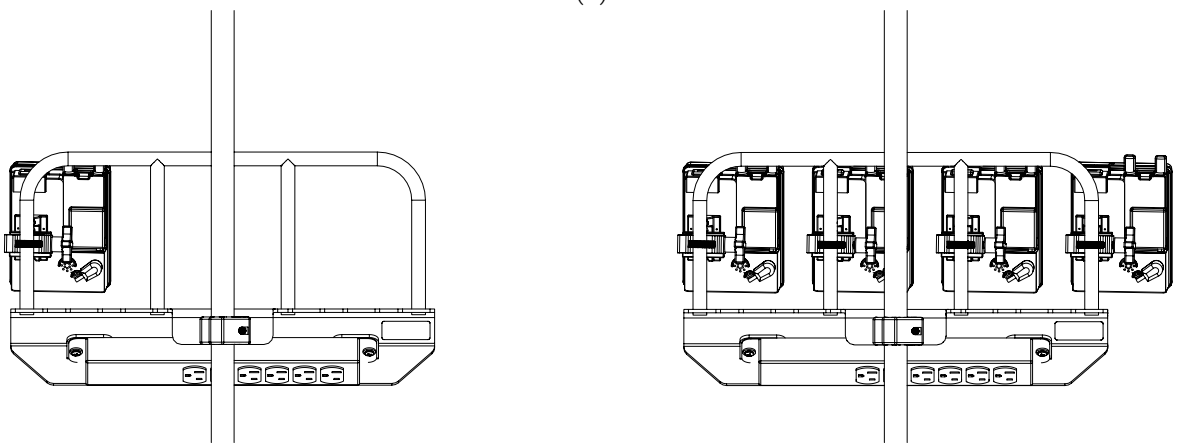

Figure 14: Connecting the infusion pump in the optional power bar

The installation of the infusion pump(s) on the Pump Carrier – 254 is complete.

8.5. Remove the Infusion Pump(s) from the Pump Carrier – 254

1. Disconnect the infusion pump from the power bar, then unwind the power cord from the cable management hook located behind the mounting system, if needed (Figure 15).

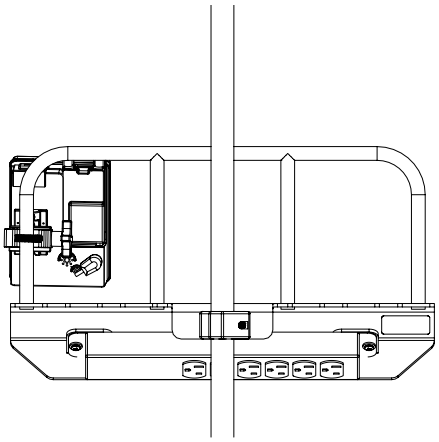

Figure 15: Disconnecting the infusion pump from the optional power bar

© 2026 Technimount Medical Inc.

2. Turn the speed knob of the double rotating IV Pole Clamp located at the back of the infusion pump (Figure 16A) until the clamp jaw is open, minimally 1 in. W (Figure 16B). Refer to the infusion pump's user documentation and/or to your established internal protocols if needed.
3. Remove the infusion pump from the Pump Carrier – 254 (Figure 16C).

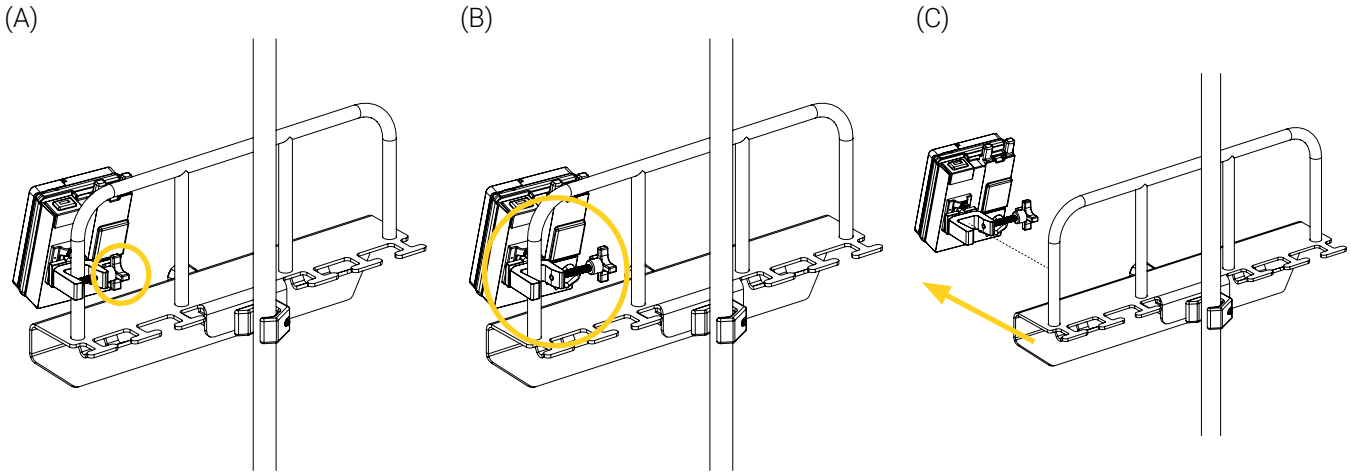

Figure 16: Removing the infusion pump(s) from the Pump Carrier – 254

4. Set the infusion pump aside on a clean surface, or place it in its dedicated storage space. Refer to your established internal protocols if needed.
5. Repeat steps 1 to 4 to remove other infusion pumps if needed.

The removal of the infusion pump(s) from the Pump Carrier – 254 is complete.

© 2026 Technimount Medical Inc.

Annex I Skills Assessment of the Clinical Staff



The content in this section is intended for personnel who have a proficient level of competency. Refer to the « User Competency » section on page 5 if needed.

Following training, a skills assessment should be given to each member of the clinical personnel to ensure they have fully comprehended the labelling, warnings and cautions, potential risks, safe practices and proper operating procedures needed to safely and effectively use the Pump Carrier – 254. Consider adding the following to your internal training protocols.

Trainee name: _____ Unit: _____

Assessor name: _____ Date: _____

SKILLS ASSESSMENT		
SKILL CRITERIA	PASSED	FAILED
Labelling		
- Able to identify meaning and potential risks associated with the different safety labels:		
- Manufacturing label	☐	☐
- Safe Working Load (SWL)	☐	☐
Safety Measures		
- Knows that **under no circumstances** should the Pump Carrier – 254 be installed on rails.	☐	☐
- Knows that the Pump Carrier – 254 was specifically engineered to be used with the compatible infusion pumps and IV stands with poles between 19 mm – 32 mm D (0.75 in. – 1.25 in. D) and that using any other pump/stand may cause the equipment to fall, operate unpredictably, or fail.	☐	☐
- Knows that Technimount assumes no responsibility for any damage, malfunction, or injury arising from improper installations and/or using incompatible systems/medical devices that haven't been inspected and/or approved according to the herein requirements.	☐	☐
- Knows **not to use** the Pump Carrier – 254 for air and/or ground emergency medical services and critical care transport.	☐	☐
- Knows **not to use** the Pump Carrier – 254 if there are any loose or missing screws.	☐	☐
- Knows **not to lean on and/or use** the Pump Carrier – 254 as an armrest when it is installed on the IV stand.	☐	☐

© 2026 Technimount Medical Inc.

SKILLS ASSESSMENT		
SKILL CRITERIA	PASSED	FAILED
- Knows to always **keep fingers/hands away** from the clamp jaw when installing the Pump Carrier – 254 on the IV stand.	☐	☐
- Knows to immediately stop using the Pump Carrier – 254 if any serious incident occurs and to inform authorized personnel.	☐	☐
- Knows **not to overtighten** the clamp jaw during installation.	☐	☐
- Knows to always ensure that the Pump Carrier – 254 is correctly installed on the pole before moving the IV stand.	☐	☐
- Knows to always wait until the IV stand is immobilized before installing/removing the infusion pumps in/from the Pump Carrier – 254.	☐	☐
- Knows to always ensure that the infusion pumps are correctly installed on the Pump Carrier – 254 before moving the IV stand.	☐	☐
- Knows to always pay close attention **not to wedge** the power cords or tubing during the installation/removal of the Pump Carrier – 254 on/from the IV stand and/or the infusion pumps on/from the Pump Carrier – 254.	☐	☐
- Knows to always pay close attention to the safety mechanism of the Pump Carrier – 254.	☐	☐
- Knows to always practice safely operating the Pump Carrier – 254 until the manipulations have been perfected, before use with patients and that improper use of the mounting system may cause damage or the equipment to fall or operate unpredictably.	☐	☐
- Knows **not to overload or exceed** the total Safe Working Load (SWL) of the Pump Carrier – 254	☐	☐
- Knows that the Safe Working Load (SWL) of the Pump Carrier – 254 **does not override** the maximum load capacity of another Technimount product or system, neither those of the medical devices and/or medical equipment accessories.	☐	☐
- Knows **not to install** the Pump Carrier – 254 too high on the IV stand and to ensure the IV stand is stable, regardless of the height of the installation.	☐	☐
- Knows to always refer to their established internal protocols, as well as read and abide by the safety guidelines and instructions provided in the user documentation of the Pump Carrier – 254, the IV stand and the infusion pump.	☐	☐
Operation		
- Able to install/remove the Pump Carrier – 254 on/from the IV stand.	☐	☐
- Able to adjust the height of the Pump Carrier – 254 on the IV stand.	☐	☐
- Able to install/remove the infusion pump(s) on/from the Pump Carrier – 254.	☐	☐

© 2026 Technimount Medical Inc.

Annex II Unpack the Pump Carrier – 254



The content in this section is intended for personnel who have an advanced level of competency. Refer to the « User Competency » section on page 5 if needed.

1. Inspect the shipping box(es) for signs of damage before accepting shipment. Take pictures and report them promptly if applicable.
2. Move the shipping box(es) to the location of the installation.
3. Open the shipping box(es).
4. Unpack the box(es) and ensure that all shipping and packaging materials have been properly removed, prior to installation.

   NOTE : Keep all packaging material for future use.
5. Identify the items included in the shipping box(es), then set them aside. Refer to the « Install the Optional Accessories » section on page 29, if needed.
6. Inspect the items for signs of damage. Take pictures and report them promptly if applicable.

© 2026 Technimount Medical Inc.

Annex III Install the Optional Accessories



The content in this section is intended for personnel who have an advanced level of competency. Refer to the « User Competency » section on page 5 if needed.



WARNING – Risk of Injury

Always wear/use the appropriate Personal Protection Equipment (PPE) based on your established internal protocols (e.g., gloves, eyewear, etc.) during the installation.

NOTE : The illustrations herein are for user-comprehension purposes and may differ from your actual configuration. The instructions apply to any compatible accessory. Refer to their user documentation for the safety guidelines and safe use, if needed.

Install the Power Bar on the Pump Carrier – 254

Estimated Installation Time

- 5 minutes

Required Parts

- 6-outlet, medical-grade power bar – 906-00-KT or 4-outlet, medical-grade power bar – 904-00-KT. The kit includes:
  - ¼-20 in. X 1 in. round head Phillips screw (2X)
  - ¼ in. external tooth lock washer (2X)
  - ¼ in. flat washer (2X)

Customer-Provided Tools

- Phillips-head screwdriver #2

© 2026 Technimount Medical Inc.

Installation Procedure

1. Remove the Pump Carrier – 254 from the IV stand (Figure 17). Refer to the « Remove the Pump Carrier – 254 from the IV Stand » section on page 21, if needed.

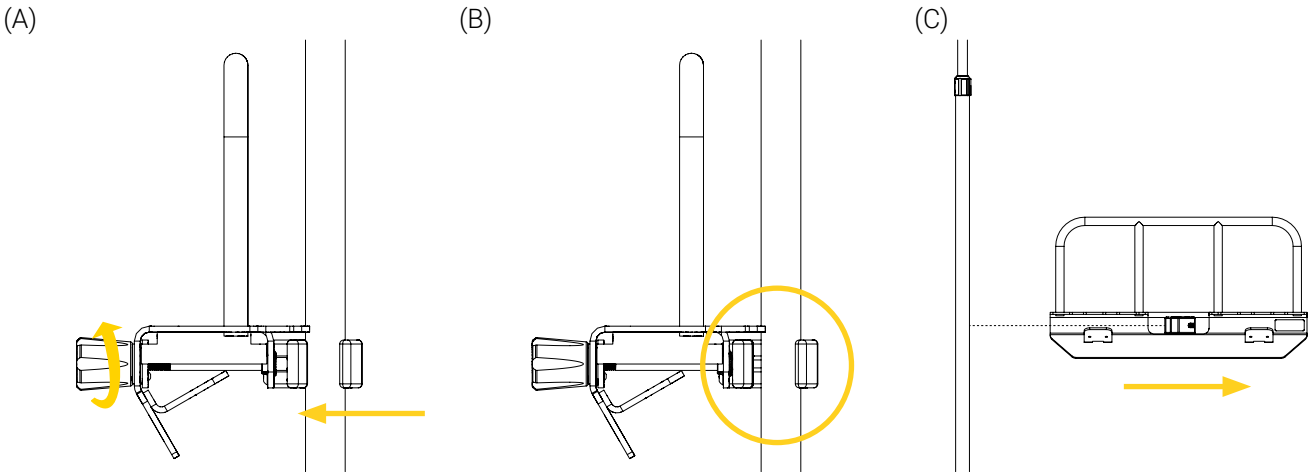

Figure 17: Removing the Pump Carrier – 254 from the IV stand

2. Identify the installation parts (Figure 18).

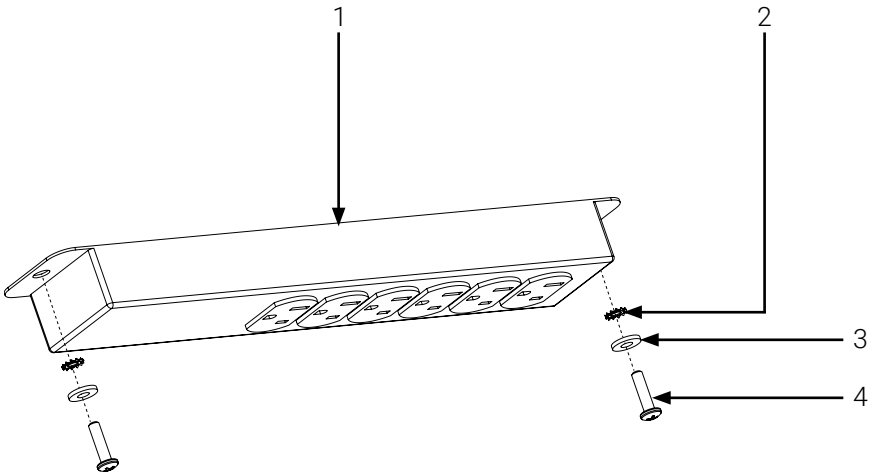

1. Power bar (6-outlet, medical-grade power bar illustrated)	3. ¼ in. flat washer (2X)
2. ¼ in. external tooth lock washer (2X)	4. ¼-20 in. X 1 in. round head Phillips screw (2X)

Figure 18: Installation parts

© 2026 Technimount Medical Inc.

3. Locate the screw holes on the power bar mounting plates that are compatible with your power bar model. Use the two (2) inner holes for the installation of the 4-outlet, power bar (Figure 19A) or the two (2) outer holes for the installation of the 6-outlet power bar (Figure 19B).

(A) (B)

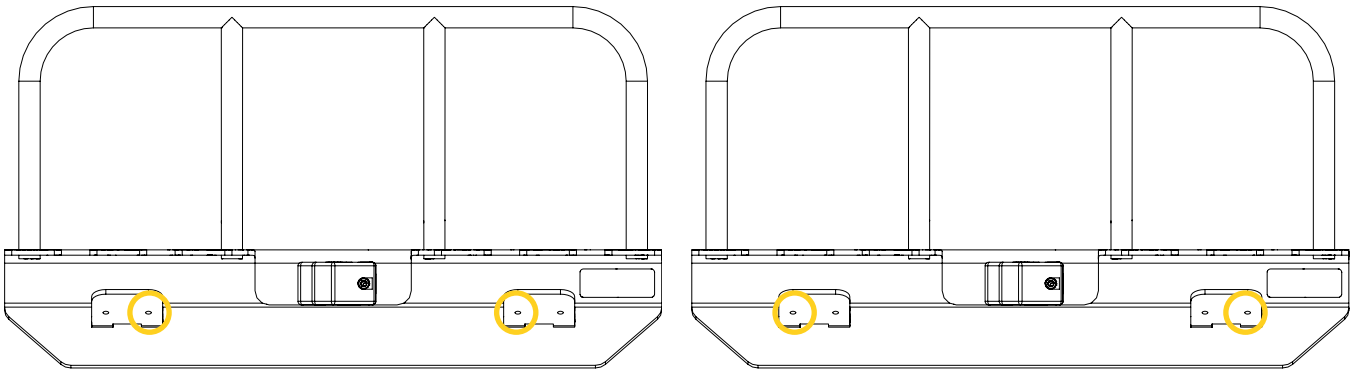

Figure 19: Screw holes on the power bar mounting plates

4. Determine the orientation of the outlets for the installation of your power bar (Figure 20).

(A) (B)

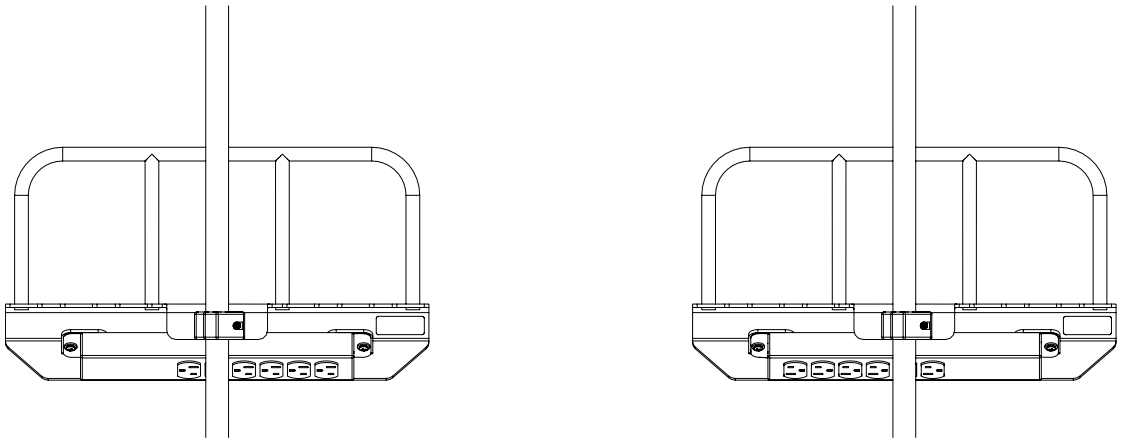

Figure 20: Power bar orientations

© 2026 Technimount Medical Inc.

5. Insert a ¼ in. flat washer, followed by a ¼ in. external tooth lock washer, on the stem of each ¼-20 in. X 1 in. round head Phillips screw, then insert the stems through the front of the power bar and the power bar mounting plates screw holes located at the back of the mounting system (Figure 21A).
6. Tighten the screws until the teeth of the lock washer bite into both surfaces using a Phillips-head screwdriver #2, fully compressing the lock washer to ensure a complete path for current flow between the power bar and mounting system (Figure 21B).

(A) (B)

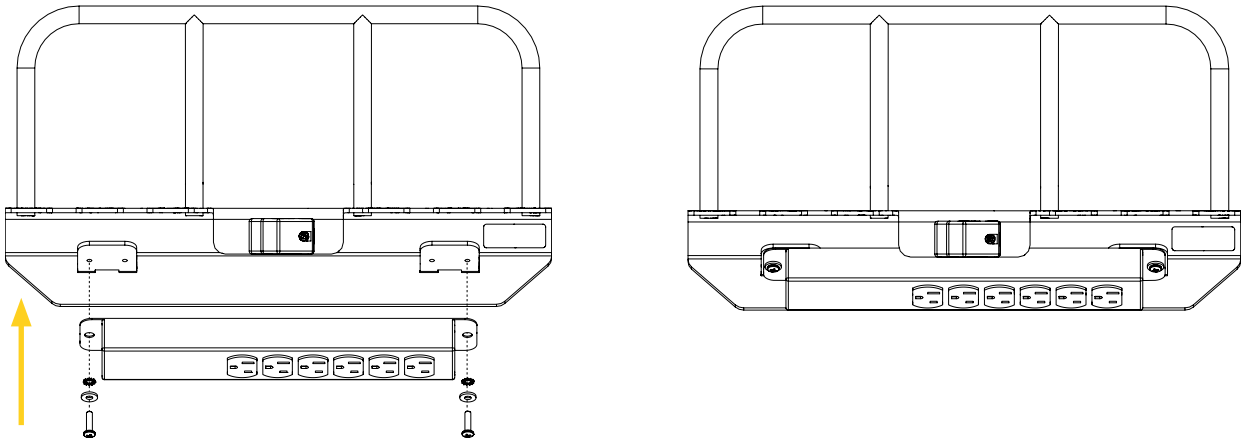

Figure 21: Installing the power bar on the Pump Carrier – 254

7. Move the power bar back and forth and from side to side a few times to ensure it is sufficiently tightened. If the power bar does not move during the verification, it is sufficiently tightened.

The installation of the power bar on the Pump Carrier – 254 is complete.

© 2026 Technimount Medical Inc.

Annex IV Permanently Lock the Pump Carrier – 254 on the IV Stand

The content in this section is intended for personnel who have an advanced level of competency. Refer to the « User Competency » section on page 5 if needed.

WARNING – Risk of Injury

Always wear/use the appropriate Personal Protection Equipment (PPE) based on your established internal protocols (e.g., gloves, eyewear, etc.) during the installation.

Estimated Time of Procedure

1 minute

Customer-Provided Tools

- $^{3}/_{16}$ in. hex key

Locking Procedure

1. Install the Pump Carrier – 254 on the IV stand at the desired height. Refer to the « Install the Pump Carrier – 254 on the IV Stand » section on page 20 or to the « Adjusting the height of the Pump Carrier – 254 on the IV Stand » section on page 22, if needed.
2. Tighten the lock screw located at the back of the mounting system, using a $^{3}/_{16}$ in. hex key (Figure 22).

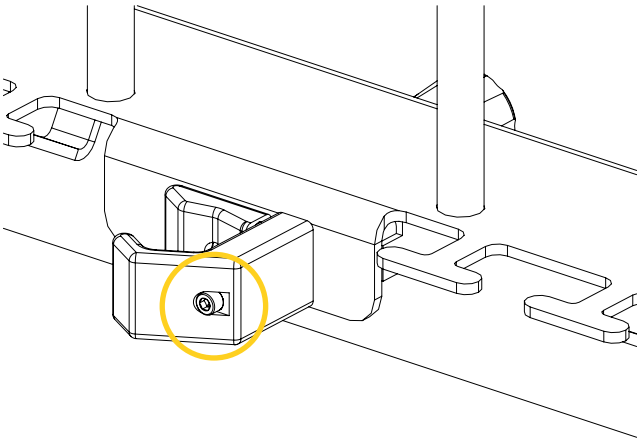

Figure 22: Locking the Pump Carrier – 254 on the IV stand

3. Move the mounting system up and down and from side to side a few times to ensure it is firmly attached on the pole. If the pump carrier does not move during the verification, it is firmly attached.

The Pump Carrier – 254 is permanently locked on the IV stand.

© 2026 Technimount Medical Inc.

Annex V Unlock the Pump Carrier – 254 from the IV Stand

The content in this section is intended for personnel who have an advanced level of competency. Refer to the « User Competency » section on page 5 if needed.

WARNING – Risk of Injury

Always wear/use the appropriate Personal Protection Equipment (PPE) based on your established internal protocols (e.g., gloves, eyewear, etc.) during the installation.

Estimated Time of Procedure

1 minute

Customer-Provided Tools

- $^{3}/_{16}$ in. hex key

Unlocking Procedure

1. Loosen the lock screw located at the back of the Pump Carrier – 254, using a $^{3}/_{16}$ in. hex key (Figure 23).

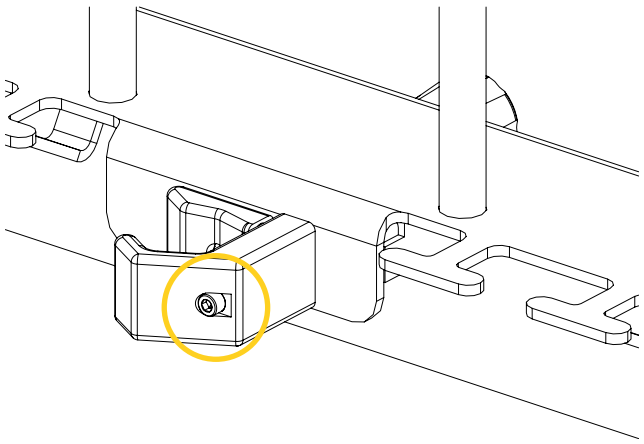

Figure 23: Unlocking the Pump Carrier – 254 from the IV stand

2. Adjust the height of the mounting system to ensure it is unlocked and can be move up and down the pole. If the pump carrier can be moved during the verification, it is unlocked. Refer to section « Adjusting the height of the Pump Carrier – 254 on the IV Stand » section on page 22 if needed.

The Pump Carrier – 254 is unlocked from the IV stand.

© 2026 Technimount Medical Inc.

Annex VI Maintenance



The content in this section is intended for personnel who have an advanced level of competency. Refer to the « User Competency » section on page 5 if needed.

Factors such as weather, environment, geographical location and individual usage will necessitate different needs. For the maintenance of the Pump Carrier – 254, follow the guidelines listed herein and in accordance with your service's current maintenance practices and established internal protocols. Please contact Technical Support at techsupport@technimount.com for replacement parts or repair related issues, if needed.



WARNING – General Warning

- **Do not perform** the safety checks or the condition-based maintenance before having read the entire « Safety Measures » section on page 11 and the maintenance specific safety measures in this section, having read the entire content of this user manual, having gained in-depth knowledge and product comprehension, as well as having familiarized yourself with the standards and guidelines.
- Safety checks and a condition-based maintenance plan are required and should be established for all Technimount products.
- Perform the safety checks and maintenance operations as described herein. Failing to follow the recommended maintenance plan or its guidelines could cause premature damage to the product.
- Use only Technimount parts, maintenance procedures, cleaning solutions and lubricants (if applicable), as described herein. Using unapproved modified parts or procedures for the maintenance of the Technimount product may cause the system to be unstable and could cause injury to the patients or clinical personnel and void the product warranty.
- Replace damaged or worn-out parts if past their expected service life or when damaged (refer to the « Replacement Parts/Kits » section on page 41). Recycle damaged parts or dispose according to the environmental laws that apply to your jurisdiction and consult the Safety Data Sheets (SDS).



CAUTION – Safe Handling and Operation

- **Do not use** unauthorized, untested or unapproved cleaning products and disinfectants to perform condition-based maintenance, to avoid damaging the surface of your Technimount product and void the warranty. Technimount will not be held liable for damages resulting from the use of an unauthorized, untested or unapproved cleaning product.
- **Do not use** powered tools to screw the hardware during installation, as there is a risk of damage to the threads.
- **Do not steam clean or use ultrasonic cleaners** on the system or any of its components.
- **Do not immerse** the metal parts/components in water.
- To spot clean, the maximum water temperature should not exceed 82° C (180° F). The maximum water pressure should not exceed 1500 psi/103.5 BAR. If using a high pressure washer, the pressure nozzle must be kept a minimum of 609.6 mm (24 in.) from the product.
- When cleaning, always use the appropriate Personal Protection Equipment (PPE) based on your established internal protocols (e.g., gloves, eyewear, etc.).
- Disconnect the power cord(s) (optional accessory) before performing the condition-based maintenance, as there is a risk of electrocution. Refer to the user documentation of the power bar and/or to your established internal protocols if needed.

© 2026 Technimount Medical Inc.



CAUTION – Corrosion

- Always rinse and dry the Pump Carrier – 254 components properly after using cleaning products. Certain types of cleaners may leave a corrosive residue on the surface of the product and could cause the premature corrosion of critical components. Refer to the product Safety Data Sheets (SDS) for chemical information or handling, storage and emergency measures in case of accident.
- Dispose of corrosive wastes according to the environmental laws that apply to your jurisdiction and consult the Safety Data Sheets (SDS).



CAUTION – Follow Instructions for Use

Always read and abide by all the safety guidelines identified, as well as follow all of the instructions provided by the manufacturer of the cleaning product.

Maintenance Frequency

- Safety checks and the condition-based maintenance should be performed minimally every month or as frequently needed, to prolong the longevity of the Pump Carrier – 254 in optimal conditions.
- Decontaminate the Pump Carrier – 254 as recommended in your established internal protocols, as well as the regulations and standards in virtue of the infection prevention and control procedures.

Customer-Provided Tools

- Clean and dry cloth
- Soft brush
- Pressure washer
- Cleaning solutions
- $^{3}/_{16}$ in. hex key
- Phillips-head screwdriver #2

Tested and Approved Cleaning Solutions

- Oxivir, 5% Hydrogen Peroxide with Peracetic Acid (AHP)
- Lavo 12, 10 000 ppm Sodium Hypochlorite
- TNT-100, 5% Quaternary Ammonium Compound
- Spectro-Sept, 5% Ethyl Alcohol
- Spectrol, 5% EDTA salt

© 2026 Technimount Medical Inc.

Maintenance Plan

1. Check the boxes upon completion of the « Safety Checks » section on page 37 and the « Condition-Based Maintenance » section on page 38, then add your comments and/or observations in the « Maintenance Log » section on page 39 if needed. In case of a non-conformity, immediately stop using the Pump Carrier – 254 and contact Technical Support at techsupport@technimount.com for a remedial action plan.
2. Keep records of your maintenance activities.

SAFETY CHECKS	CHECKED
Pump Carrier – 254 (Figure 24)	
- Visually inspect all the components of the Pump Carrier – 254 to ensure that the hardware is in good condition and there are no loose screws. • *If the hardware is not in good condition, replace it. Contact Technical Support if needed.* • *If the screws are loose, there is a non-conformity.*	☐
- Visually inspect all the components of the Pump Carrier – 254 to ensure there is no chemical attack. • *If there are traces of chemical attack, clean the mounting system. Refer to the « Condition-Based Maintenance » section on page 38 if needed.*	☐
- Open/close the clamp jaw of the Pump Carrier – 254 a few times to ensure proper functioning of the safety mechanism of the mounting system. • *If the clamp jaw does not open and/or close easily when using the c-clamp knob or a resistance if felt when doing so, there is a non-conformity.*	☐
- Install/remove the Pump Carrier – 254 on/from the IV stand a few times to ensure proper functioning of the safety mechanism of the mounting system. • *If the mounting system does not firmly grip on the pole when using the c-clamp knob and/or moves when testing the sturdiness of the installation, there is a non-conformity.* • *If the mounting system cannot be removed from the pole when using the c-clamp knob, there is a non-conformity.*	☐
- Visually inspect the manufacturing label to ensure that specifications are still legible and that the Pump Carrier – 254 has not passed its expected service life. Refer to the « Labels » section on page 10 and the « Technical Specifications » section on page 14 if needed. • *If the specifications are illegible and/or the estimated period of safe and reliable use has passed, there is a non-conformity.*	☐

© 2026 Technimount Medical Inc.

CONDITION-BASED MAINTENANCE	CHECKED

Clean the Pump Carrier – 254, after you have completed the safety checks: ☐

1. Remove the excess dirt using a clean cloth, if needed.
2. Remove the contaminants using a pressure washer or as recommended in your established internal protocols and control procedures.
3. Clean using a cloth and cleaning solution.
4. Spot clean stains by applying the solution directly on the stain and let sit on the surface, if needed.

   NOTE : Avoid over saturation and ensure that the product **does not sit** on the surface of the Pump Carrier – 254 components longer than recommended by the cleaner's manufacturer.

5. Thoroughly rinse the solution with a clean cloth dampened with lukewarm water, then dry all the components using a clean cloth before returning to service.

© 2026 Technimount Medical Inc.

MAINTENANCE LOG

Add your comments and/or observations, after you have completed the safety checks and condition-based maintenance, if needed:

Maintenance plan completed on (dd/mm/yyyy): _____

Maintenance plan completed by: _____

© 2026 Technimount Medical Inc.

Illustrated Inspection Points

Figure 24 illustrates the inspection points of the Pump Carrier – 254.

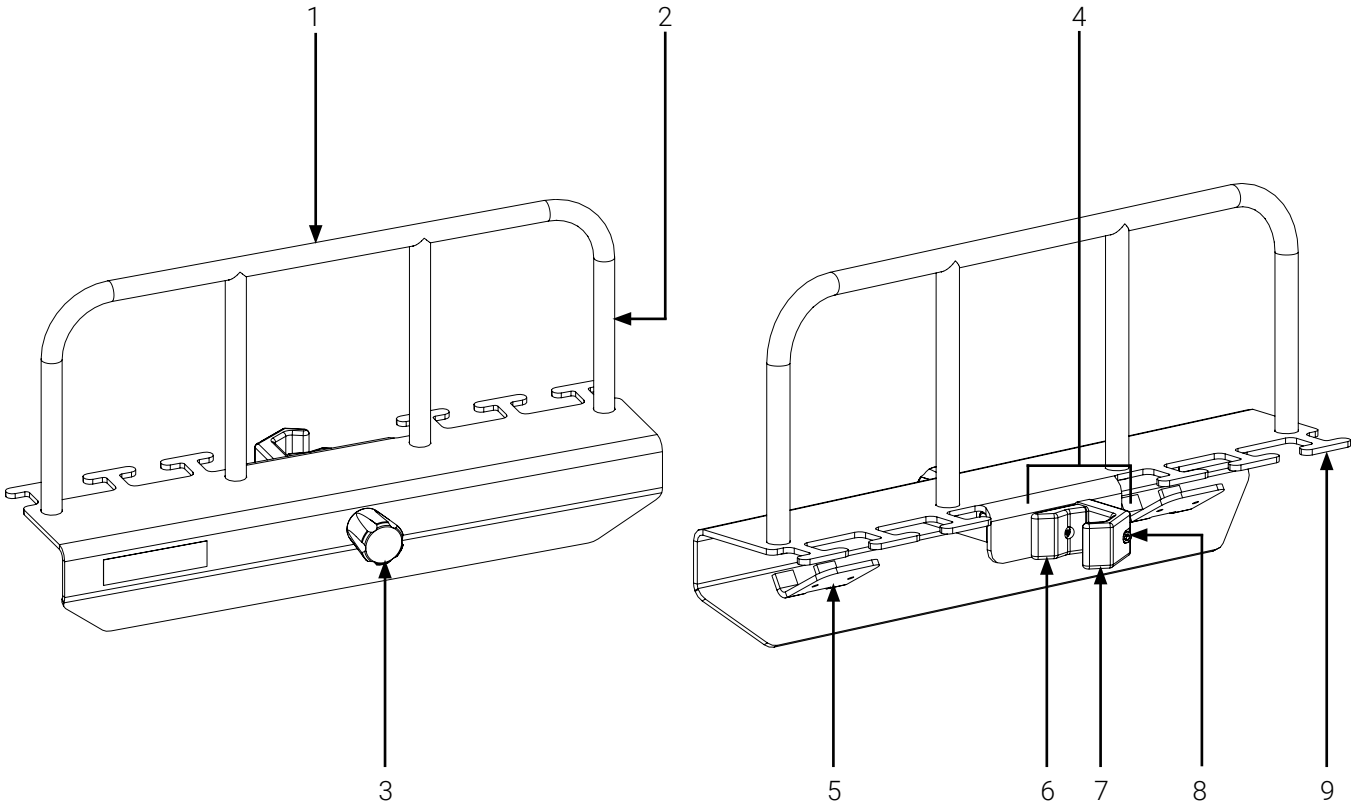

1. Top handle
2. Vertical pole for pump installation (4X)
3. C-clamp knob
4. C-clamp
5. Mounting plate (optional power bar; 2X)
6. Fixed jaw (c-clamp)
7. Adjustable jaw (c-clamp)
8. Locking screw
9. Cable management hook (6X)

Figure 24: Illustrated inspection points

© 2026 Technimount Medical Inc.

Annex VII Replacement Parts/Kits



The content in this section is intended for personnel who have a proficient or advanced level of competency. Refer to the « User Competency » section on page 5 if needed.

Technimount reserves the right to change part numbers and products without notice. Please contact Customer Service at customerservice@technimount.com to ensure product options and availability, or Technical Support at techsupport@technimount.com for replacement parts/kits or repair related issues.

REFERENCE #	PART/KIT #	PART/KIT DESCRIPTION	REPLACEMENT PROCEDURE
Figure 24, 8	TCM-VC-999-189	Locking screw	A $^{3}/_{16}$ in. hex key is required.
N/A	904-00-KT	4-outlet, medical-grade power bar kit	Refer to the IN-RPRC-PS-202608EN-01 replacement procedure
N/A	906-00-KT	6-outlet, medical-grade power bar kit	Refer to the IN-RPRC-PS-202608EN-01 replacement procedure

© 2026 Technimount Medical Inc.

TECHNIMOUNT
MEDICAL®

MAKING HEALTHCARE PRACTICES MORE EFFICIENT

© 2026 Technimount Medical Inc. | technimount.com